Hollister-Whitney Elevator Corporation

PRINT & PARTS LIST SUPPLEMENT
GL101, GL131, GL171, GL171X, GL130A, GL185 and GL260
AC Permanent Magnet, Gearless Machines
With Outboard Stands
See also Bulletin 1162: Installation and Service Manual, at:

https://www.hollisterwhitney.com/support/

Table of Contents

- **MACHINES - OVERHEAD**
  - **GL101**
  - **GL131**
  - **GL171 & GL171X**
  - **GL130A & GL130A1**
  - **GL185**
  - **GL260**
- **MACHINES – OVERHEAD – w/ROPE GRIPPER MOUNTS**
  - **GL101-620**
  - **GL101-622**
  - **GL131-620**
  - **GL131-622**
  - **GL171-620 & GL171X-620**
  - **GL171-622 & GL171X-622**
- **MACHINES – BASEMENT SET**
  - **GL101BS**
  - **GL131BS**
  - **GL171BS & GL171XBS**
  - **GL130ABS**
  - **GL130A1BS**
  - **GL185BS**
  - **GL186BS**
  - **GL260BS**
- **WHEEL GUARDS/ROPE RETENTION**
  - **GL101-176**
  - **GL101-177**
  - **GL171-176**
  - **GL130A1-176**
  - **GL185-176**
  - **GL185-177**
- **ELECTICAL BOX - RELOCATION KITS**
  - **GL100RK- 159**
  - **GL130A RK-159**
- **BRAKES, HAND RELEASE, CENTERING DEVICES**
  - **GL100-146A**
  - **GL130-144A**
  - **GL185-147A**
  - **146-047M6**
  - **144-047M8**
  - **147-047M10**
  - **146-030**
  - **144-030**
  - **147-030**

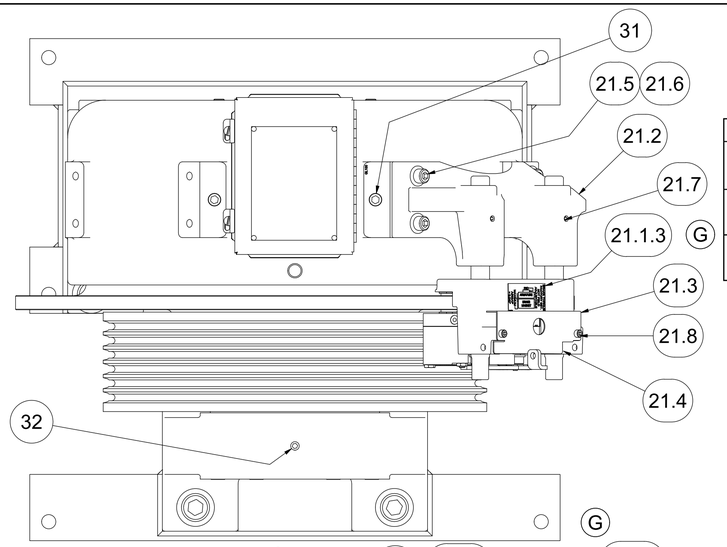

TRACTION WHEEL	ROPING	COUNTER BALANCE % 50	47.5	45	42.5	40	CAPACITY (LBS)
15"	1:1	1500	1425	1350	1300	1250	
	2:1	3000	2850	2700	2600	2500	
15.75"	1:1	1425	1350	1275	1225	1175	
	2:1	2850	2700	2575	2475	2375	
20"	1:1	1125	1050	1000	975	925	
	2:1	2250	2125	2025	1950	1875	

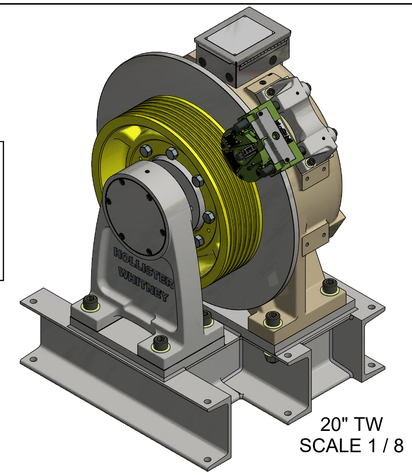

20" TW
SCALE 1 / 8

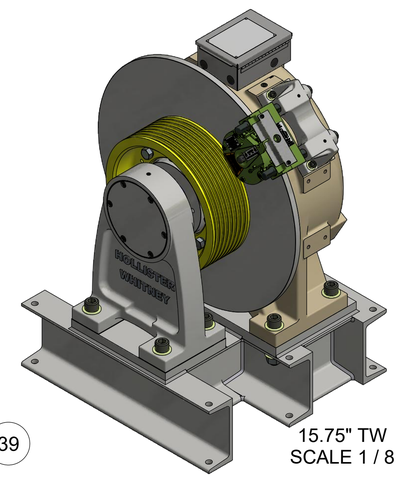

15.75" TW
SCALE 1 / 8

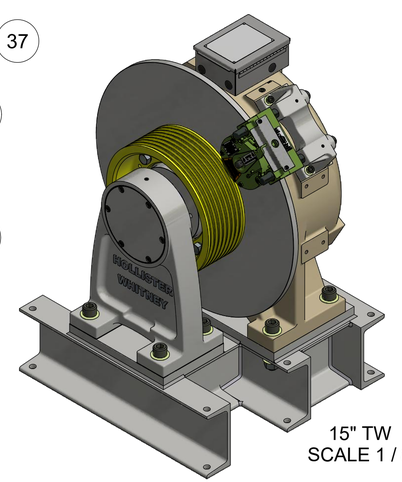

15" TW
SCALE 1 / 8

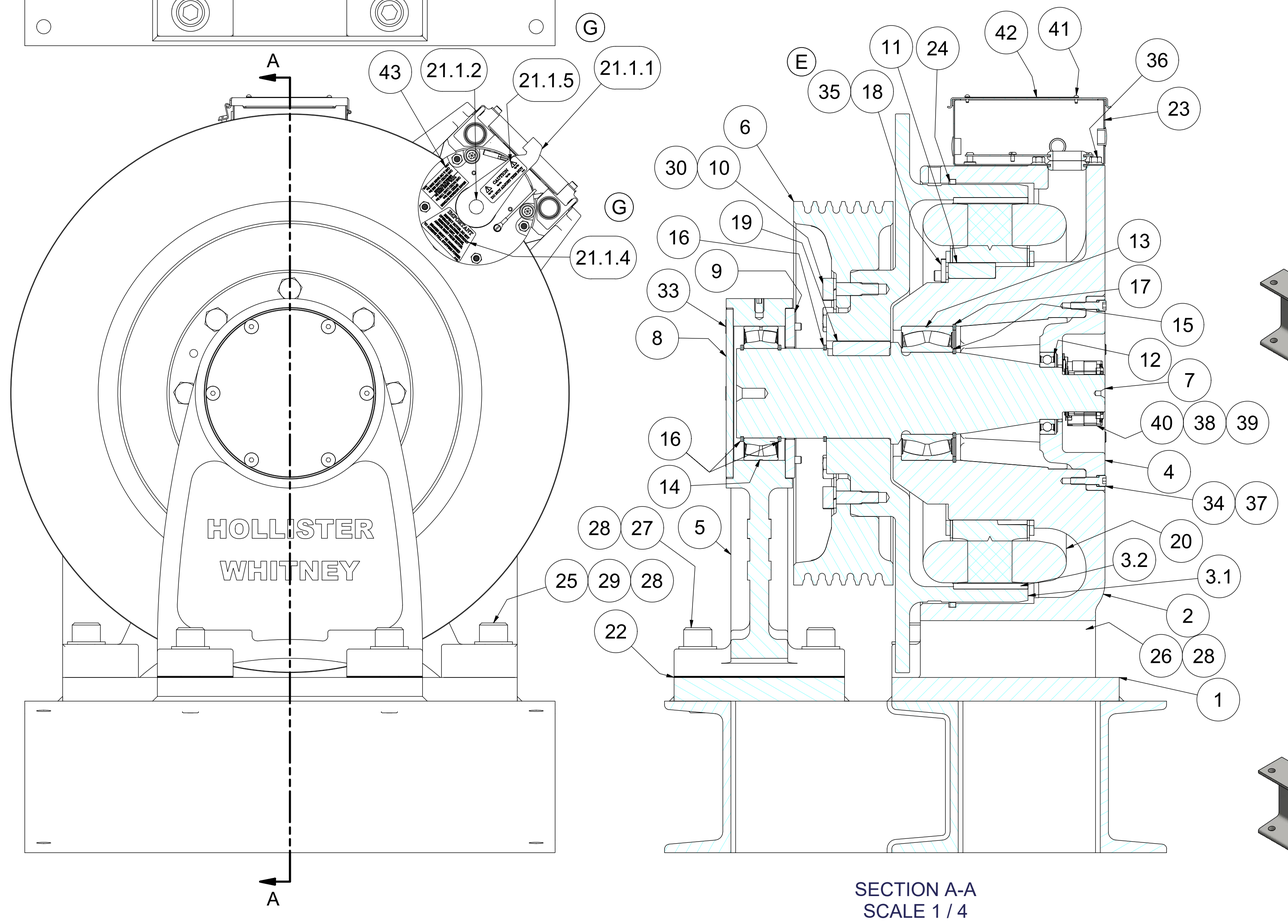

SECTION A-A
SCALE 1 / 4

ITEM	QTY	PART NUMBER	DESCRIPTION
1	1	GL101B-01	BASE FABRICATION - FINISHED
2	1	GL100-001	BASE HOUSING, MOTOR #GL100
3	1	GL101-002	ROTOR ASSEMBLY, MOTOR #GL100
3.1	1	GL101-004	ROTOR
3.2	28	GL100-099	PERMANENT MAGNET - MOTOR #GL100
4	1	GL260-005	BEARING CAP
5	1	GL171-006	OUTBOARD STAND, AC GEARLESS
6	1	GL100-010	20" TW (6 x 1/2" ROPE MAX)
		GL101-009	15" TW (8 x 3/8" ROPE MAX)
		GL101-011	15.75" TW (8 x 3/8" ROPE MAX)
7	1	GL101-018	MAIN SHAFT
8	1	GL185-019	END CAP
9	1	GL171-020	BEARING END CAP
10	8	GL100-073	BODY BOLT
11	1	GL100-088	KEY - STATOR CORE TO BASE
12	1	GL185-089	BEARING, SEALED SINGLE ROW DEEP GROOVE BALL
13	1	GL100-090	Bearings, Sealed Spherical Roller
14	1	GL185-090	BEARING, SEALED SPHERICAL ROLLER
15	1	GL100-092	RETAINING RING - SHAFT
16	3	GL130-092	RETAINING RING - SHAFT
17	1	GL100-093	RETAINING RING - HOUSING
E 18	3	GL100-094-1	CLAMP - STATOR ASSEMBLY
19	1	GL100-095	KEY - ROTOR TO SHAFT
20	1	GL100-100	WINDING ASSEMBLY
21	1	GL100-146	DISC BRAKE (MAYR #6) - MRL
21.1	1	GL100-146-115S	MAYR #6 BRAKE WITH STANDARD STICKERS
F 21.1.1	1	GL100-146-115	MAYR #6 RSD6/894.510.03S 52V #8275067
G 21.1.2	1	142-050	BLACK VINYL CAP
21.1.3	1	P-175	TAG, GEARLESS MACHINE BRAKE AIRGAP DATA
21.1.4	1	P-190	ROTOR INSPECTION & BRAKE BURNISHING STICKER
21.1.5	1	P-229	CAUTION LABEL - DO NOT ADJUST THIS NUT
21.2	1	142-001	BRAKE BASE
21.3	1	146-003	COVER - MAYR #6 ELECTRICAL
21.4	2	142-012	BRAKE ROD
21.5	4	1/2-13 UNC x 2	SOCKET HEAD CAP SCREW
21.6	4	1/2" WASHER	STANDARD WASHER
21.7	2	3/8-16 UNC x 0.375	SET SCREW
21.8	2	M6 x 1.00 x 8mm	SHCS - Metric
22	As Nec.	GL171-157-05	OUTBOARD STAND SHIM - 0.005"
		GL171-157-10	OUTBOARD STAND SHIM - 0.010"
		GL171-157-31	OUTBOARD STAND SHIM - 0.031"
23	1	GL100-159	ELECTRICAL ENCLOSURE, HOFFMAN A806CH - MODIFIED
24	1	GL100-165	FELT DUST SEAL
25	2	1 - 8 UNC x 5"	SOCKET HEAD CAP SCREW
26	2	1 - 8 UNC x 4"	SOCKET HEAD CAP SCREW
27	4	1 - 8 UNC x 3.25"	SOCKET HEAD CAP SCREW
28	8	1" WASHER	SAE WASHER
29	8	1" NUT	HEX NUT
30	8	Washer GB 859-87 18	Single coil spring lock washers, Light type
31	6	3/4 - 10 UNC x 0.75"	SET SCREW (HOLE PLUG)
32	6	1/2 - 13 UNC x 0.5"	SET SCREW (HOLE PLUG)
33	6	3/8-16 UNC x 4	FLAT HEAD CAP SCREWS
34	6	3/8 - 16 UNC x 1.5	SOCKET HEAD CAP SCREW
E 35	3	3/8 - 16 UNC x 1	SOCKET HEAD CAP SCREW
36	4	3/8 - 16 UNC x 0.625"	WHIZ BOLT
E 37	6	0.375 WASHER	CAP SCREW LOCK WASHER
38	4	#8-32 x 1/4"	SOCKET HEAD CAP SCREW
39	4	#8 WASHER	INT. TOOTH LOCKWASHER
40	1	ECN 113 52810061	50mm HEIDENHAIN ENCODER
G 41	4	#6 U x 0.3125	DRIVE SCREW
42	1	P-173	MOTOR TAG - PMAC GEARLESS MACHINE
43	1	P-210	TAG, GL101 - BRAKE RATINGS FOR MAYR #6

THESE APPLICATIONS USING WINDINGS DESIGNED FOR 2:1

MACHINE #	WINDING P/N	COIL/WINDING EFFICIENCY (%)	FRAME/MAGNET SIZE (mm)	VOLTAGE (Vac)	MACHINE SPEED (rpm)	ROPED 1:1 CAR SPEED 20" (fpm)	ROPED 1:1 CAR SPEED 15.75" (fpm)	ROPED 1:1 CAR SPEED 15" (fpm)	ROPED 2:1 CAR SPEED 20" (fpm)	ROPED 2:1 CAR SPEED 15.75" (fpm)	ROPED 2:1 CAR SPEED 15" (fpm)
GL101-15L	GL100-170-150	87.2	100	170	76.4	400	315	300	200	158	150
GL101-15H	GL100-360-150	87.1	100	360	76.4	400	315	300	200	158	150
GL101-20L	GL100-170-200	89.2	100	170	101.9	533	420	400	267	210	200
GL101-20H	GL100-360-200	89.3	100	360	101.9	533	420	400	267	210	200

WEIGHT: 1920.5 lbmass

			F	MAYR #8275067 WAS #8211863, PUR #1244	LTL 12/9/19
			E	3X GL100-094-1 WAS 1X GL100-094, 3X 3/8x1HHCS	LTL 6/5/19
G	UPDATE BRAKE PARTS LIST & TAGS, PUR #1260	LTL 12/19/19		WAS 6X, REMOVE 6X 3/8 WASHERS, PUR #1111	

THIS DRAWING IS SUPPLIED AS A REPRESENTATION OF THE EQUIPMENT HOLLISTER-WHITNEY ELEVATOR CO. LLC ("MANUFACTURER") HAS AGREED TO SUPPLY. SLIGHT ADJUSTMENTS MAY OCCUR DURING MANUFACTURING AND INSTALLATION. ANY MODIFICATIONS NOT APPROVED IN WRITING BY MANUFACTURER MAY AFFECT OPERATION, VOIDS ANY WARRANTY AND RELEASES MANUFACTURER OF ALL LIABILITY.
THIS DOCUMENT CONTAINS CONFIDENTIAL AND PROPRIETARY INFORMATION THAT CANNOT BE REPRODUCED OR DIVULGED, IN WHOLE OR IN PART, WITHOUT WRITTEN AUTHORIZATION FROM THE MANUFACTURER.

THIRD ANGLE PROJECTION

HOLLISTER-WHITNEY
ELEVATOR CO. LLC

TITLE: GEARLESS MACHINE w/OUTBOARD STAND

DRAWN BY	SCALE	MATERIAL	REFERENCE TOL.
LTL	1 / 4	SEE PARTS LIST	ALL DIMENSIONS REFERENCE UNLESS OTHERWISE SPECIFIED

SHEET SIZE	DATE	
D	5/21/2014	GL101 SHEET 1 OF 2

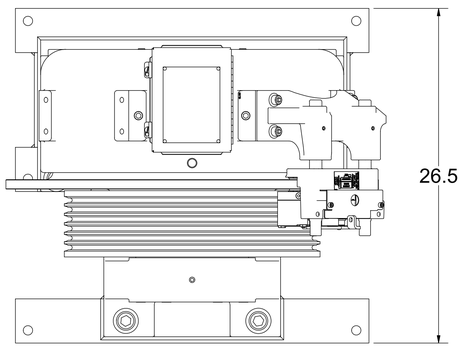

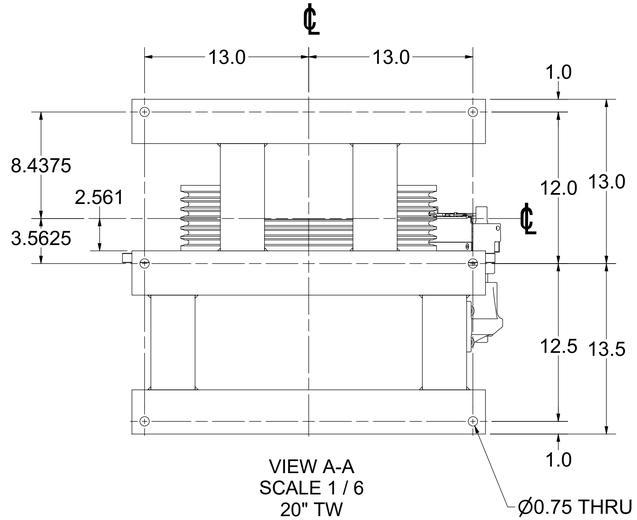

VIEW A-A
SCALE 1 / 6
20" TW

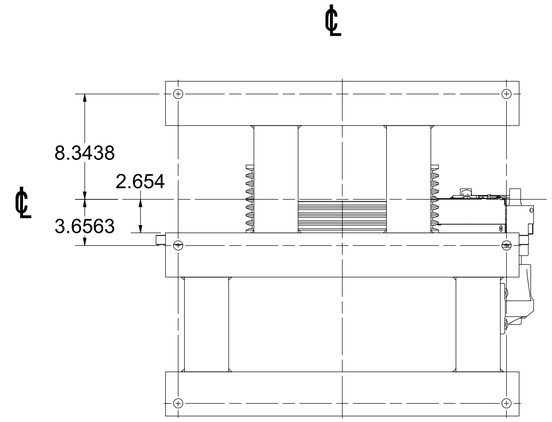

VIEW B-B
SCALE 1 / 6
15" TW

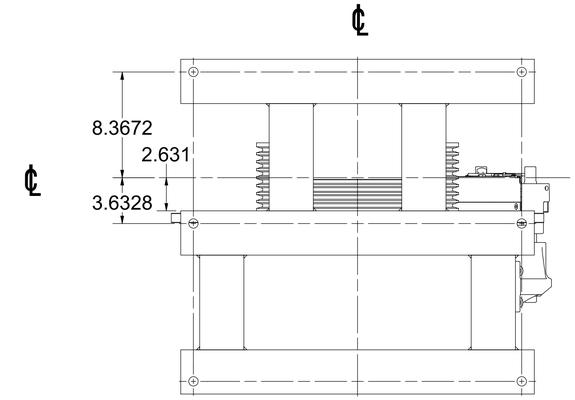

VIEW C-C
SCALE 1 / 6
15.75" TW

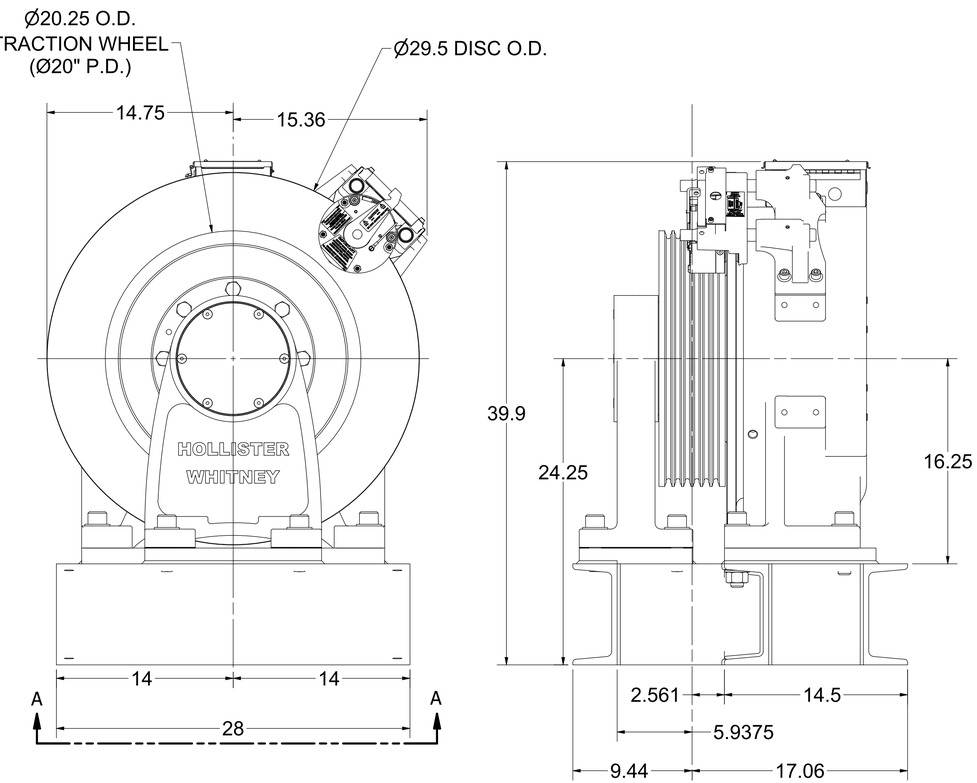

20" TRACTION WHEEL

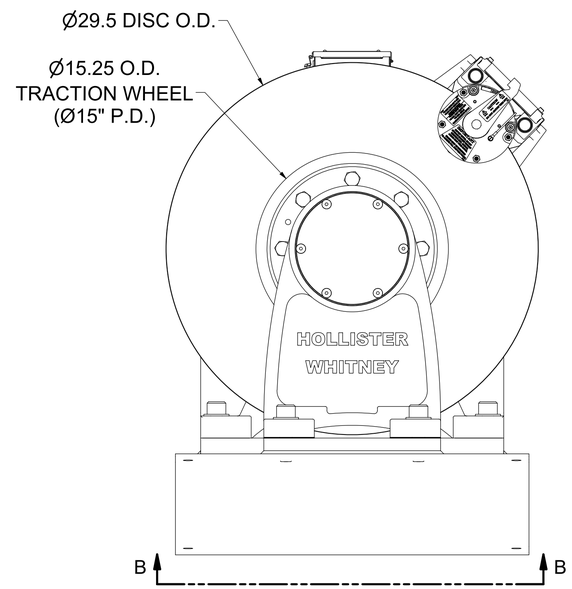

15" TRACTION WHEEL

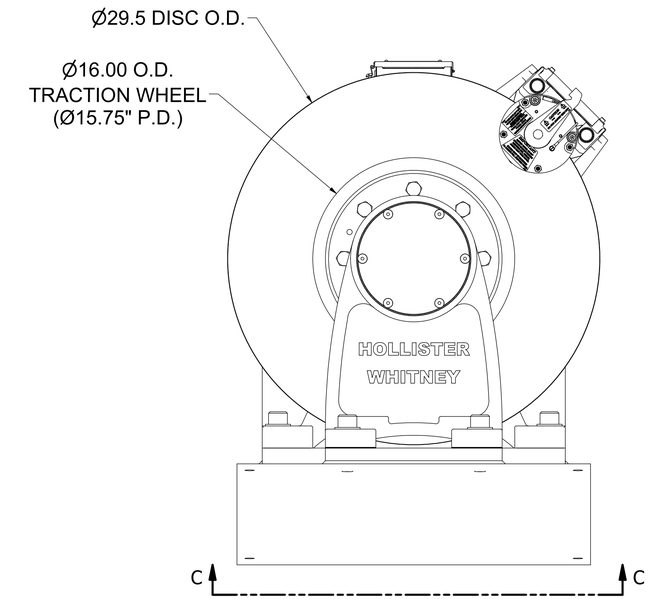

15.75" TRACTION WHEEL

SEE PAGE 1 OF 2 FOR
REVISIONS

NOTE: TRACTION WHEEL CENTERLINE VARIES WITH DIAMETER

WEIGHT: 1920.5 lbmass

HOLLISTER-WHITNEY
ELEVATOR CO. LLC

TITLE: GEARLESS MACHINE w/OUTBOARD STAND

THIS DRAWING IS SUPPLIED AS A REPRESENTATION OF THE EQUIPMENT HOLLISTER-WHITNEY ELEVATOR CO. LLC ("MANUFACTURER") HAS AGREED TO SUPPLY. SLIGHT ADJUSTMENTS MAY OCCUR DURING MANUFACTURING AND INSTALLATION. ANY MODIFICATIONS NOT APPROVED IN WRITING BY MANUFACTURER MAY AFFECT OPERATION, VOIDS ANY WARRANTY AND RELEASES MANUFACTURER OF ALL LIABILITY.
THIS DOCUMENT CONTAINS CONFIDENTIAL AND PROPRIETARY INFORMATION THAT CANNOT BE REPRODUCED OR DIVULGED, IN WHOLE OR IN PART, WITHOUT WRITTEN AUTHORIZATION FROM THE MANUFACTURER.

THIRD ANGLE PROJECTION

DRAWN BY	SCALE	MATERIAL	REFERENCE TOL.
LTL	1 / 6	SEE PARTS LIST	ALL DIMENSIONS REFERENCE UNLESS OTHERWISE SPECIFIED
SHEET SIZE D		DATE 5/21/2014	GL101 SHEET 2 OF 2

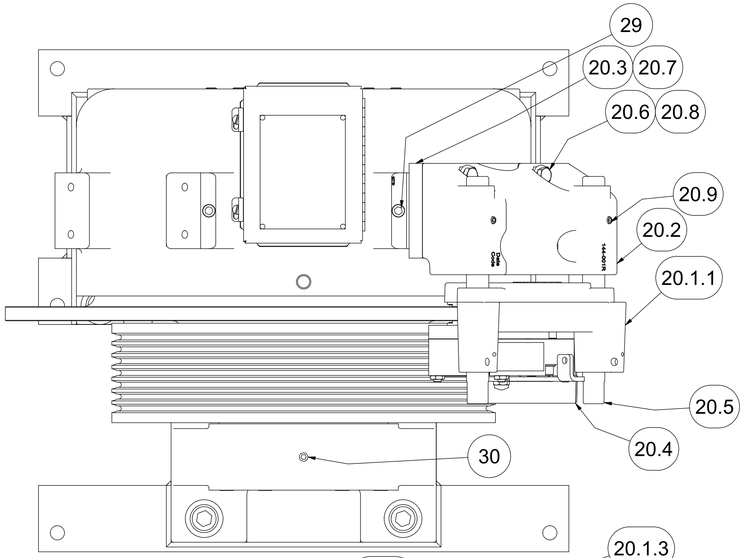

TRACTION WHEEL	ROPING	COUNTER BALANCE % 50	47.5	45	42.5	40	
15"	1:1	2000	1900	1800	1725	1650	CAPACITY (LBS)
	2:1	4000	3800	3625	3475	3325	
15.75"	1:1	1900	1800	1725	1650	1575	
	2:1	3800	3625	3450	3300	3175	
20"	1:1	1500	1425	1350	1300	1250	
	2:1	3000	2850	2725	2600	2500	

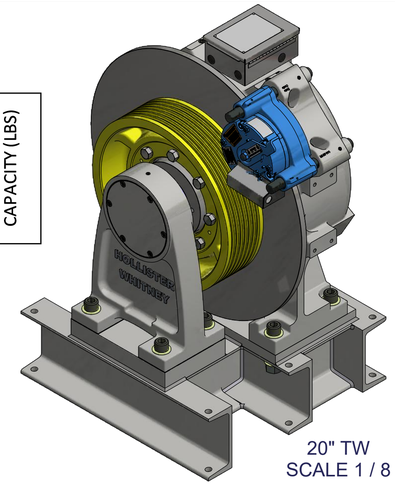

20" TW
SCALE 1 / 8

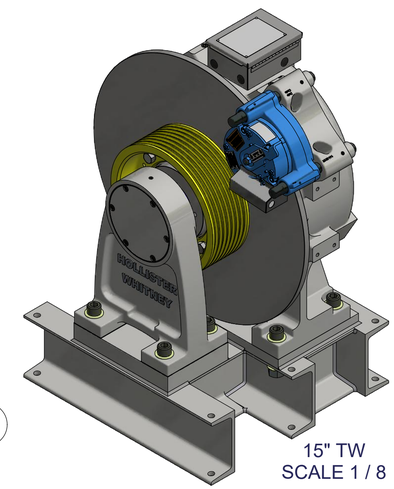

15" TW
SCALE 1 / 8

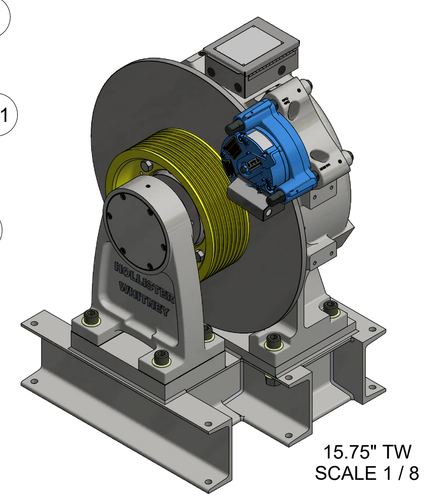

15.75" TW
SCALE 1 / 8

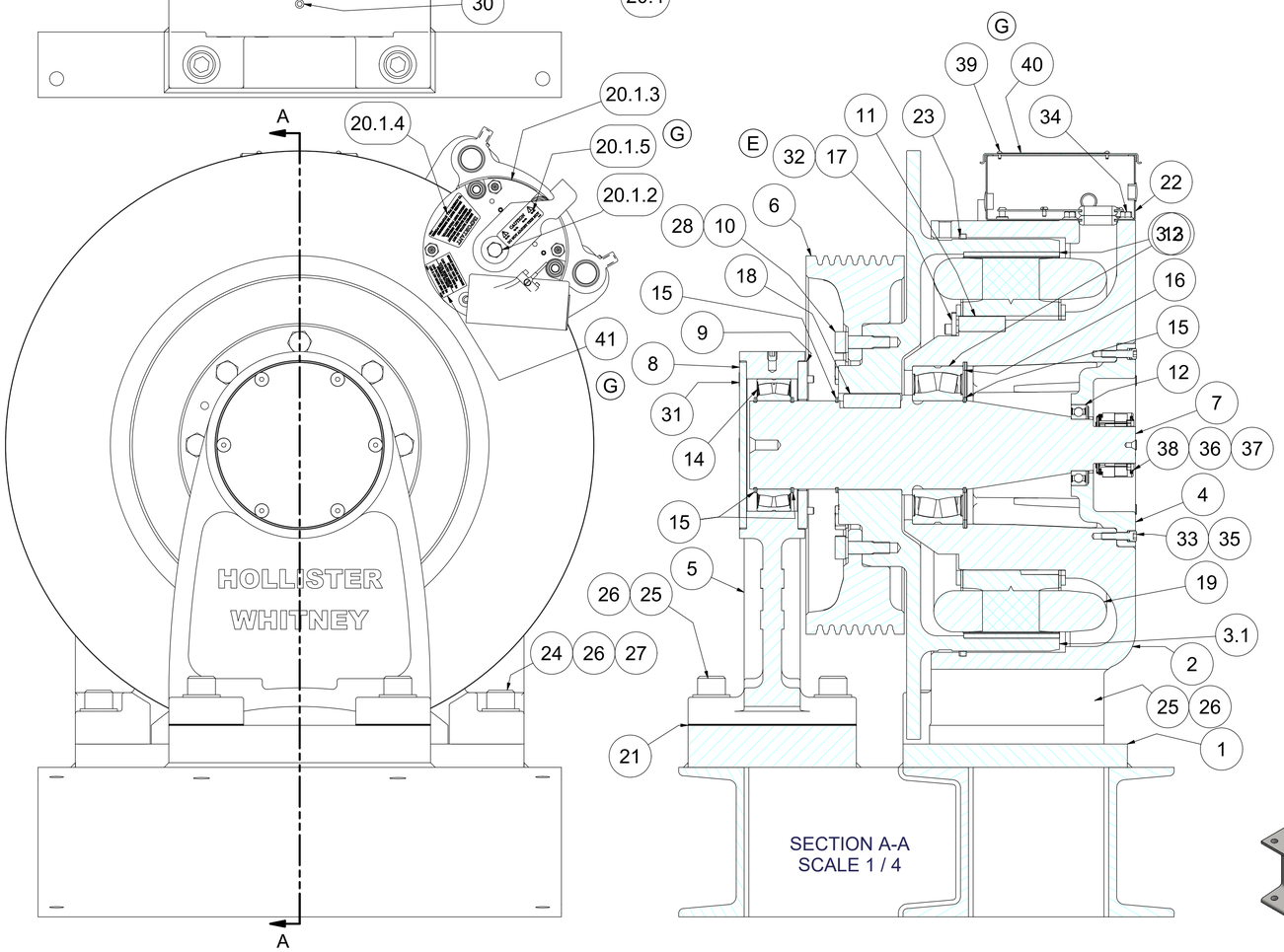

SECTION A-A
SCALE 1 / 4

	ITEM	QTY	PART NUMBER	DESCRIPTION
	1	1	GL171B-01	BASE FABRICATION - FINISHED
	2	1	GL130-001	BASE HOUSING, MOTOR #GL130
	3	1	GL131-002	ROTOR ASSEMBLY, MOTOR #GL131
	3.1	1	GL131-004	ROTOR
	3.2	28	GL130-099	PERMANENT MAGNET - MOTOR #GL130
	4	1	GL130A-005	BEARING CAP
	5	1	GL171-006	OUTBOARD STAND, AC GEARLESS
	6	1	GL100-010	20" TW (6 x 1/2" ROPE MAX)
			GL101-009	15" TW (8 x 3/8" ROPE MAX)
			GL101-011	15.75" TW (8 x 3/8" ROPE MAX)
	7	1	GL131-018	MAIN SHAFT
	8	1	GL185-019	END CAP
	9	1	GL171-020	BEARING END CAP
	10	8	GL100-073	BODY BOLT
	11	1	GL100-088	KEY - STATOR CORE TO BASE
	12	1	GL185-089	BEARING, SEALED SINGLE ROW DEEP GROOVE BALL
	13	1	GL130-090	SEALED SPHERICAL ROLLER BEARING
	14	1	GL185-090	BEARING, SEALED SPHERICAL ROLLER
	15	4	GL130-092	RETAINING RING - SHAFT
	16	1	GL130-093	RETAINING RING - HOUSING
E	17	3	GL100-094-1	CLAMP - STATOR ASSEMBLY
	18	1	GL100-095	KEY - ROTOR TO SHAFT
	19	1	GL130-100	WINDING ASSEMBLY - 28 POLE
	20	1	GL130-144	DISC BRAKE (MAYR #8) - MRL
F	20.1	1	GL130-144-115S	MAYR #8 BRAKE WITH STANDARD STICKERS
	20.1.1	1	GL130-144-115	MAYR #8; RSD8/894.510.03S 52V #8275066
G	20.1.2	1	142-050	BLACK VINYL CAP
	20.1.3	1	P-175	TAG, GEARLESS MACHINE BRAKE AIRGAP DATA
	20.1.4	1	P-190	ROTOR INSPECTION & BRAKE BURNISHING STICKER
	20.1.5	1	P-229	CAUTION LABEL - DO NOT ADJUST THIS NUT
	20.2	1	144-001	BRAKE BASE
	20.3	1	144-002	ADAPTOR PLATE - BRAKE BASE
	20.4	1	144-003	COVER - MAYR #8 ELECTRICAL
	20.5	2	144-012	BRAKE ROD
	20.6	4	1/2 - 13 UNC x 1.75"	HEX HEAD CAP SCREW
	20.7	4	1/2-13 UNC x 1.5"	FLAT HEAD CAP SCREW
	20.8	4	1/2" WASHER	STANDARD WASHER
	20.9	2	3/8-16 UNC x 0.625"	SET SCREW
	21	As Nec	GL171-157-05	OUTBOARD STAND SHIM - 0.005"
			GL171-157-10	OUTBOARD STAND SHIM - 0.010"
			GL171-157-31	OUTBOARD STAND SHIM - 0.031"
	22	1	GL100-159	ELECTRICAL ENCLOSURE, HOFFMAN A806CH - MODIFIED
	23	1	GL100-165	FELT DUST SEAL
	24	2	1 - 8 UNC x 5"	SOCKET HEAD CAP SCREW
	25	6	1 - 8 UNC x 3.5"	SOCKET HEAD CAP SCREW
	26	10	1" WASHER	SAE WASHER
	27	2	1 - 8 UNC NUT	HEAVY HEX NUT
	28	8	Washer GB 859-87 18	Single coil spring lock washers, Light type
	29	2	3/4-10 UNCx0.75	HALF DOG SET SCREW
	30	1	1/2-13 UNCx0.5	HALF DOG SET SCREW
	31	6	3/8-16 UNC x 4	FLAT HEAD CAP SCREWS
E	32	3	3/8 - 16 UNC x 1	SOCKET HEAD CAP SCREW
	33	8	3/8 - 16 UNC x 1.5	SOCKET HEAD CAP SCREW
	34	4	3/8 - 16 UNC x 0.625"	WHIZ BOLT
	35	8	0.375 WASHER	CAP SCREW LOCK WASHER
	36	4	#8-32 x 1/4"	SOCKET HEAD CAP SCREW
E	37	4	#8 WASHER	INT. TOOTH LOCKWASHER
	38	1	ECN 113 52810061	50mm HEIDENHAIN ENCODER
G	39	4	#6 U x 0.3125	DRIVE SCREW
	40	1	P-173	MOTOR TAG - PMAC GEARLESS MACHINE
	41	1	P-211	TAG, GL131 - BRAKE RATINGS FOR MAYR #8

WEIGHT: 2212.6 lbmass

THESE APPLICATIONS USING WINDINGS DESIGNED FOR 2:1											
						ROPED 1:1			ROPED 2:1		
MACHINE #	WINDING P/N	COIL/WINDING EFFICIENCY (%)	FRAME/MAGNET SIZE (mm)	VOLTAGE (Vac)	MACHINE SPEED (rpm)	CAR SPEED 20" (fpm)	CAR SPEED 15.75" (fpm)	CAR SPEED 15" (fpm)	CAR SPEED 20" (fpm)	CAR SPEED 15.75" (fpm)	CAR SPEED 15" (fpm)
GL131-20L	GL130-170-200	90.6	130	170	101.9	533	420	400	267	210	200
GL131-20H	GL130-360-200	90.7	130	360	101.9	533	420	400	267	210	200
GL131-35L	GL130-170-350	93.1	130	170	178.3	933	735	700	467	368	350
GL131-35H	GL130-360-350	93	130	360	178.3	933	735	700	467	368	350

			F	MAYR #8275066 WAS #8211833, PUR #1244	LTL 12/9/19
			E	3X GL100-094-1 WAS 1X GL100-094, 3X 3/8x1HHCS WAS 6X, REMOVE 6X 3/8 WASHERS, PUR #1111	LTL 6/5/19
G	UPDATE BRAKE PARTS LIST & TAGS, PUR #1260	LTL 12/19/19			

HOLLISTER-WHITNEY
ELEVATOR CO. LLC

TITLE: GEARLESS MACHINE w/OUTBOARD STAND

THIS DRAWING IS SUPPLIED AS A REPRESENTATION OF THE EQUIPMENT HOLLISTER-WHITNEY ELEVATOR CO. LLC ("MANUFACTURER") HAS AGREED TO SUPPLY. SLIGHT ADJUSTMENTS MAY OCCUR DURING MANUFACTURING AND INSTALLATION. ANY MODIFICATIONS NOT APPROVED IN WRITING BY MANUFACTURER MAY AFFECT OPERATION, VOIDS ANY WARRANTY AND RELEASES MANUFACTURER OF ALL LIABILITY.
THIS DOCUMENT CONTAINS CONFIDENTIAL AND PROPRIETARY INFORMATION THAT CANNOT BE REPRODUCED OR DIVULGED, IN WHOLE OR IN PART, WITHOUT WRITTEN AUTHORIZATION FROM THE MANUFACTURER.

THIRD ANGLE PROJECTION

DRAWN BY	SCALE	MATERIAL	REFERENCE TOL.
LTL	1 / 4	SEE PARTS LIST	ALL DIMENSIONS REFERENCE UNLESS OTHERWISE SPECIFIED
SHEET SIZE D		DATE 6/27/2014	GL131 SHEET 1 OF 2

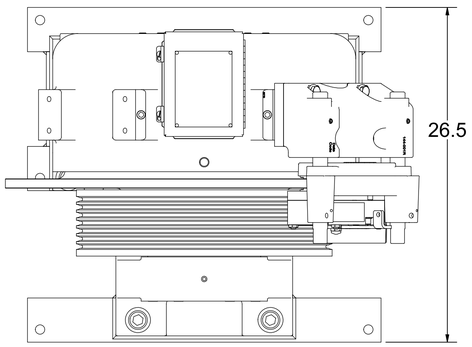

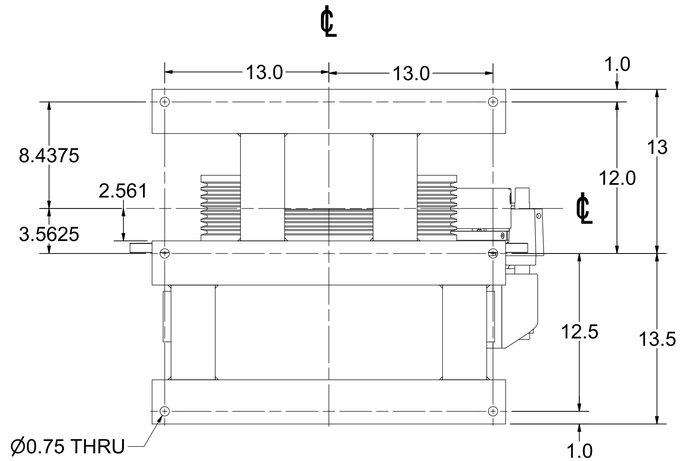

VIEW A-A
SCALE 1 / 6
20" TW

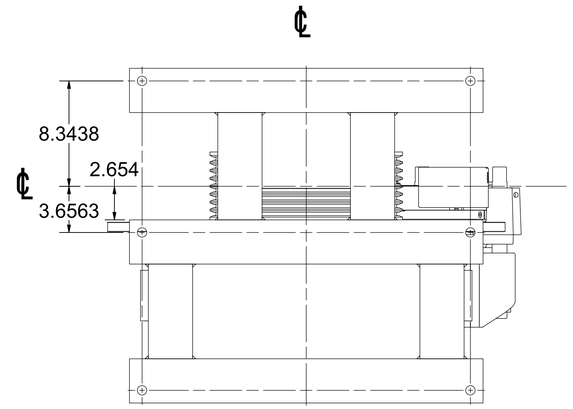

VIEW B-B
SCALE 1 / 6
15" TW

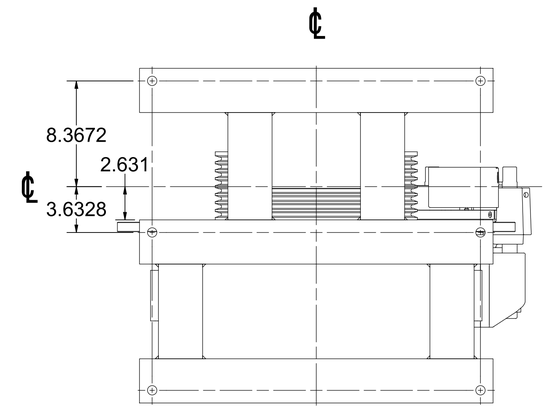

VIEW C-C
SCALE 1 / 6
15.75" TW

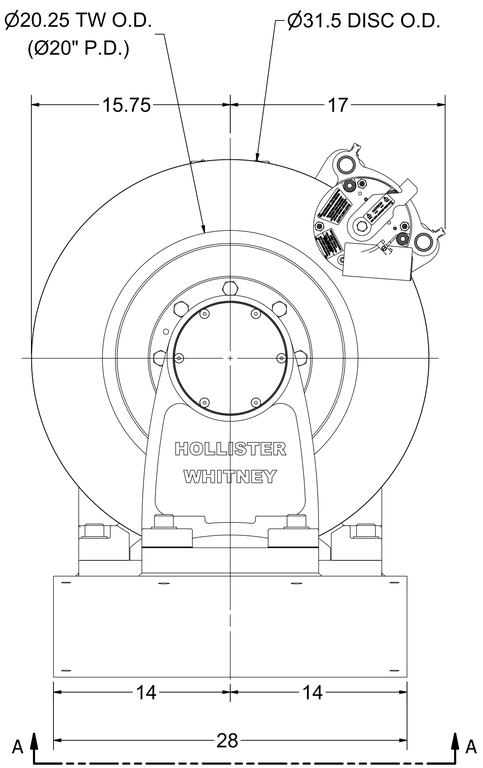

20" TRACTION WHEEL

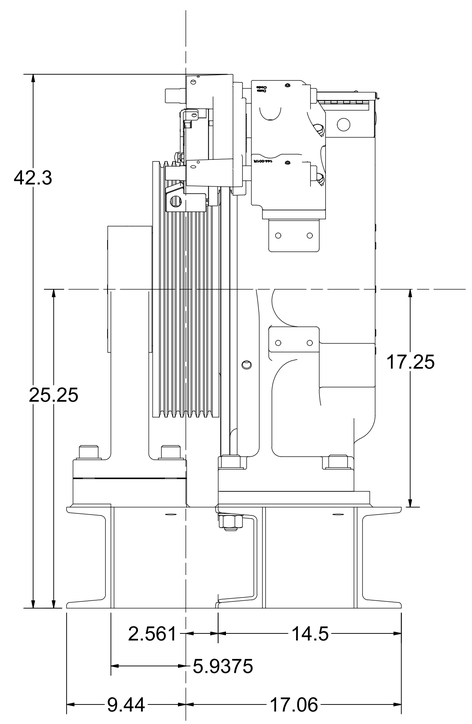

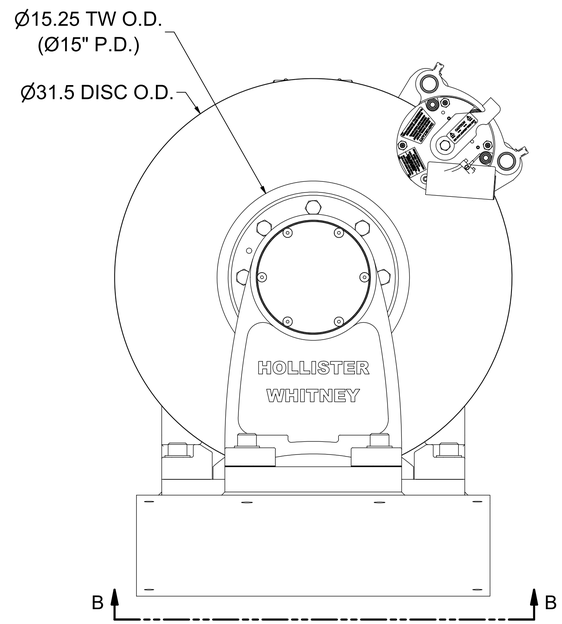

15" TRACTION WHEEL

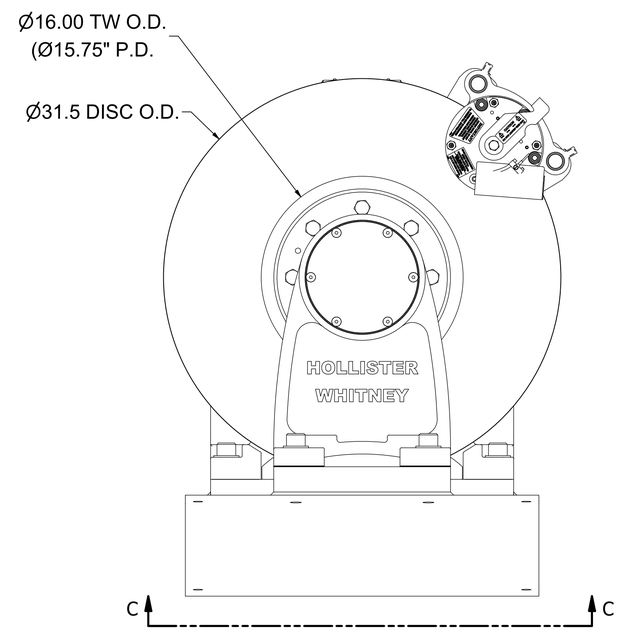

15.75" TRACTION WHEEL

SEE PAGE 1 OF 2 FOR
REVISIONS

NOTE: TRACTION WHEEL CENTERLINE VARIES WITH DIAMETER

WEIGHT: 2212.6 lbmass

HOLLISTER-WHITNEY
ELEVATOR CO. LLC

TITLE: GEARLESS MACHINE w/OUTBOARD STAND

THIS DRAWING IS SUPPLIED AS A REPRESENTATION OF THE EQUIPMENT HOLLISTER-WHITNEY ELEVATOR CO. LLC ("MANUFACTURER") HAS AGREED TO SUPPLY. SLIGHT ADJUSTMENTS MAY OCCUR DURING MANUFACTURING AND INSTALLATION. ANY MODIFICATIONS NOT APPROVED IN WRITING BY MANUFACTURER MAY AFFECT OPERATION, VOIDS ANY WARRANTY AND RELEASES MANUFACTURER OF ALL LIABILITY.
THIS DOCUMENT CONTAINS CONFIDENTIAL AND PROPRIETARY INFORMATION THAT CANNOT BE REPRODUCED OR DIVULGED, IN WHOLE OR IN PART, WITHOUT WRITTEN AUTHORIZATION FROM THE MANUFACTURER.

THIRD ANGLE PROJECTION

DRAWN BY	SCALE	MATERIAL	REFERENCE TOL.
LTL	1 / 6	SEE PARTS LIST	ALL DIMENSIONS REFERENCE UNLESS OTHERWISE SPECIFIED
SHEET SIZE D		DATE 6/27/2014	GL131 SHEET 2 OF 2

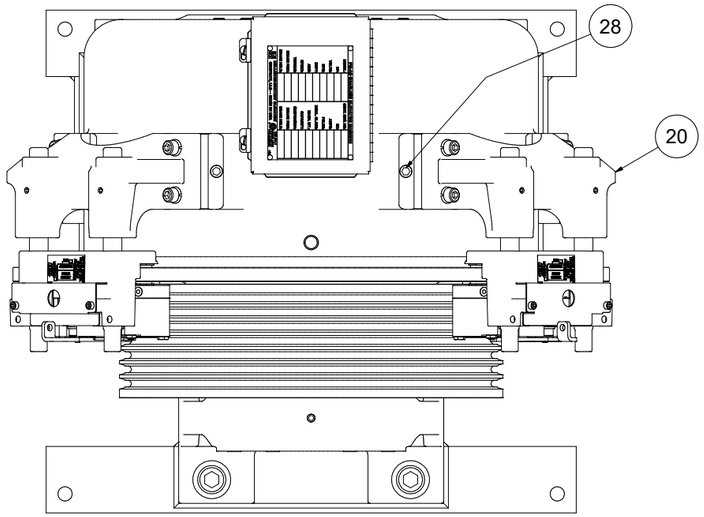

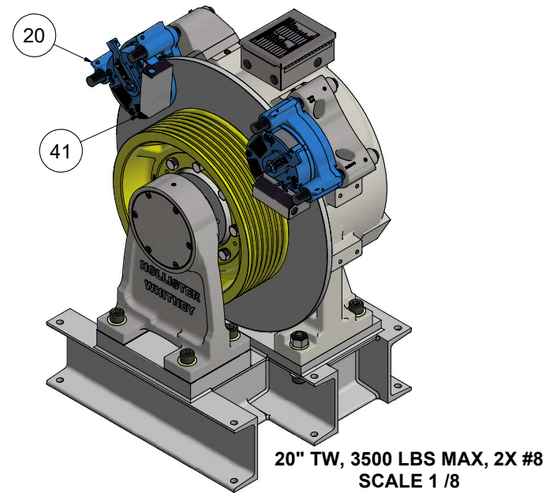

20" TW, 3500 LBS MAX, 2X #8
SCALE 1 /8

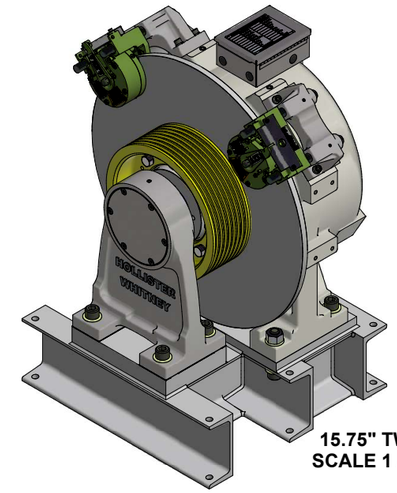

15.75" TW
SCALE 1 / 8

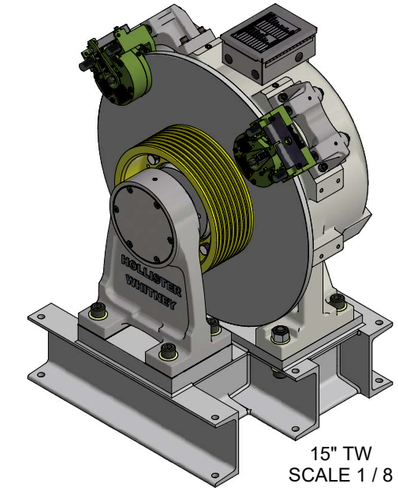

15" TW
SCALE 1 / 8

NOTE: TRACTION WHEEL CENTERLINE VARIES WITH T.W. SIZE
SEE PAGE 2 OF 3

SEE PAGE 3 OF 3 FOR PARTS LIST AND APPLICATION DETAIL CHARTS

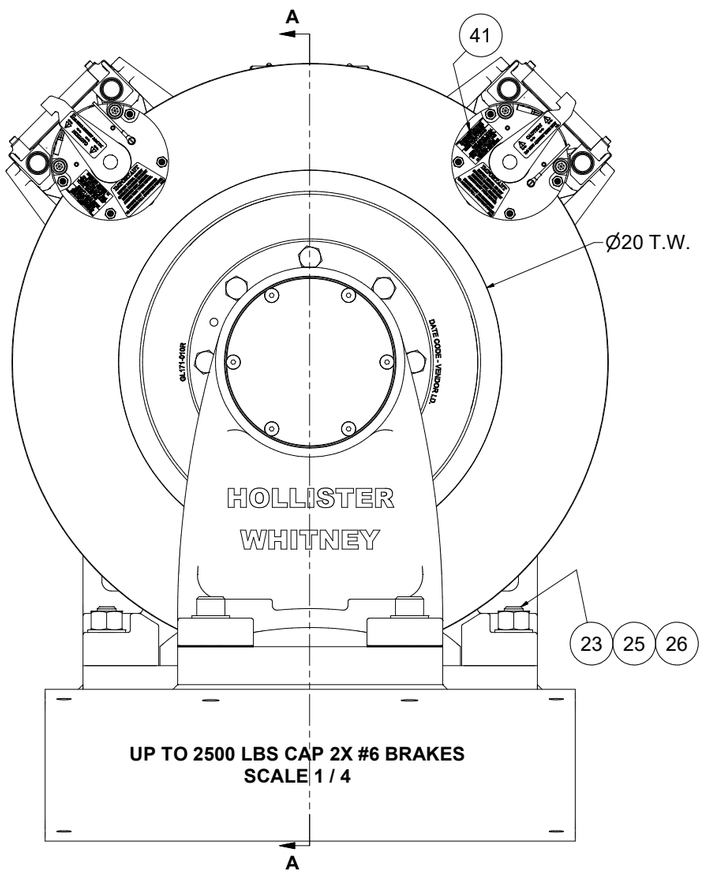

UP TO 2500 LBS CAP 2X #6 BRAKES
SCALE 1 / 4

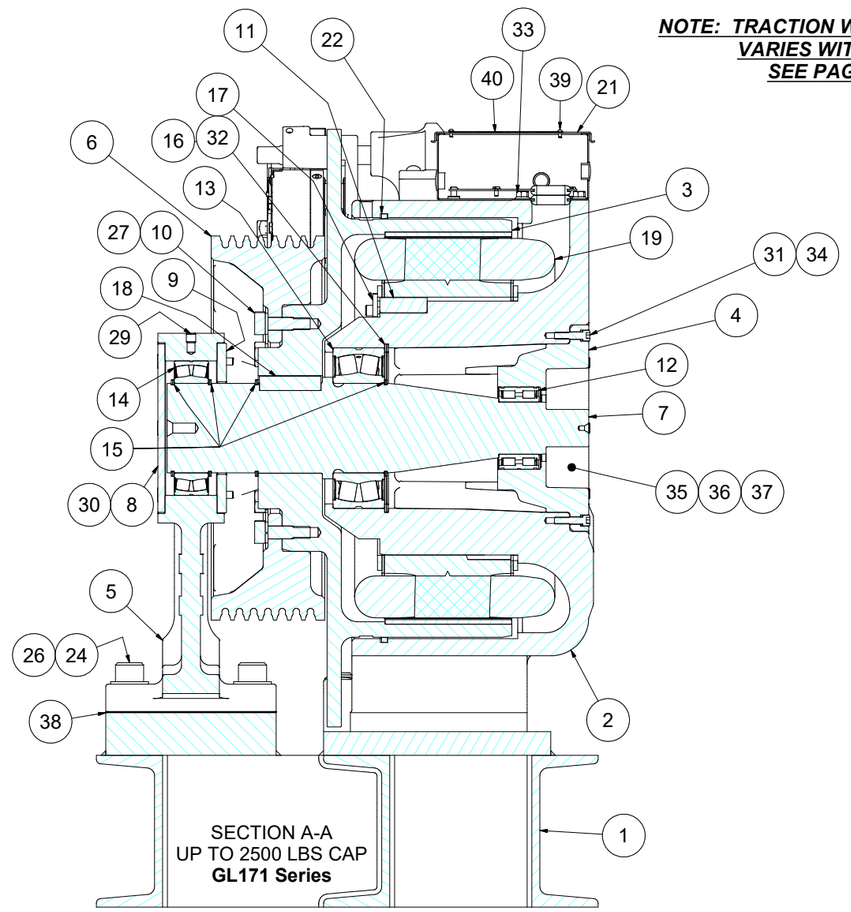

SECTION A-A
UP TO 2500 LBS CAP
GL171 Series

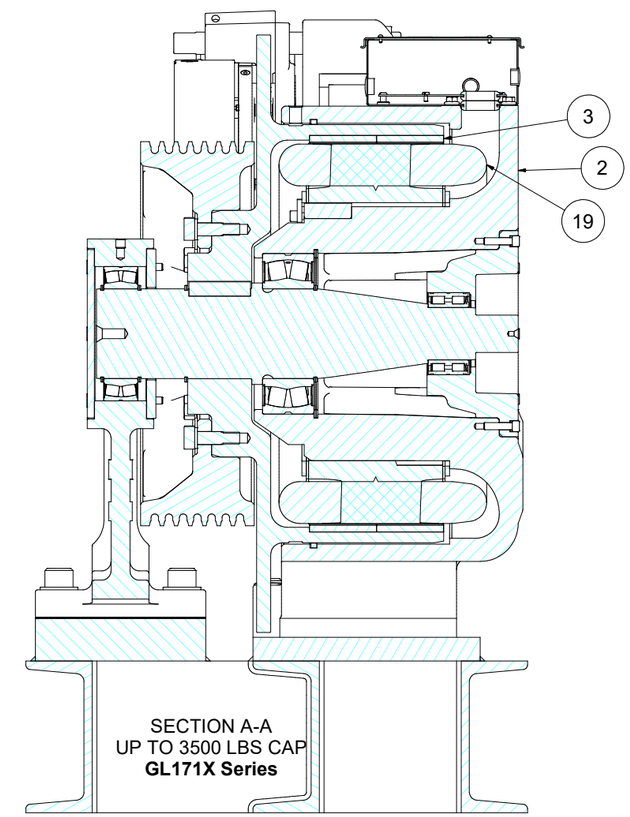

SECTION A-A
UP TO 3500 LBS CAP
GL171X Series

WEIGHT: 2420.2 lbmass

BRAKE NOTES:

1. MACHINE SHOWN ON PRINT HAS TWO (2) PRIMARY BRAKES SHOWN. ACTUAL BRAKE(S) MAY VARY IN NUMBER, SIZE, AND/OR LOCATION, PER THE NOTES BELOW.
2. BRAKE USE (ITEM 20) BASED ON 20" WHEEL CAPACITIES, AND 50% CB.
3. MACHINE MAY REQUIRE TWO (2) #6, ONE (1) #8, OR TWO (2) #8 BRAKE(S) USED AS PRIMARY MACHINE BRAKE DEPENDING ON CAPACITY SPECIFIED FOR APPLICATION.
4. EMERGENCY SERVICE ADDITIONALLY REQUIRES EITHER ONE (1) ROPE GRIPPER OR DOUBLE THE AMOUNT OF BRAKES ORIGINALLY SPECIFIED.

		T	ADD 3500# CAPACITY MACHINE w/BRAKES, ROTOR, HOUSING, WIDE 20" WHEEL, PUR #1712	LTL 12/8/22	

HOLLISTER-WHITNEY
ELEVATOR CO. LLC

TITLE: GEARLESS MACHINE w/OUTBOARD STAND

THIS DRAWING IS SUPPLIED AS A REPRESENTATION OF THE EQUIPMENT HOLLISTER-WHITNEY ELEVATOR CO. LLC ("MANUFACTURER") HAS AGREED TO SUPPLY. SLIGHT ADJUSTMENTS MAY OCCUR DURING MANUFACTURING AND INSTALLATION. ANY MODIFICATIONS NOT APPROVED IN WRITING BY MANUFACTURER MAY AFFECT OPERATION, VOIDS ANY WARRANTY AND RELEASES MANUFACTURER OF ALL LIABILITY.
THIS DOCUMENT CONTAINS CONFIDENTIAL AND PROPRIETARY INFORMATION THAT CANNOT BE REPRODUCED OR DIVULGED, IN WHOLE OR IN PART, WITHOUT WRITTEN AUTHORIZATION FROM THE MANUFACTURER.

THIRD ANGLE PROJECTION

DRAWN BY	SCALE	MATERIAL	REFERENCE TOL.
LTL	1 / 4	SEE PARTS LIST	ALL DIMENSIONS REFERENCE UNLESS OTHERWISE SPECIFIED
SHEET SIZE D		DATE 9/14/2011	GL171 SHEET 1 OF 3

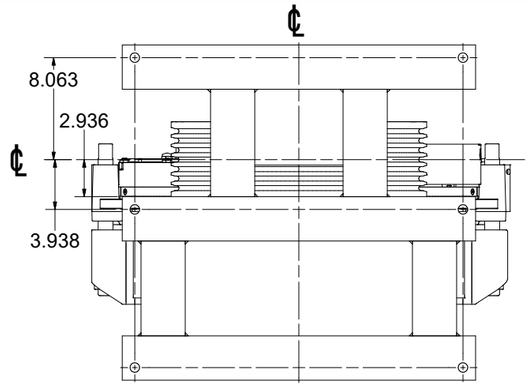

VIEW A-A
SCALE 1 / 6
20" (WIDE) TW

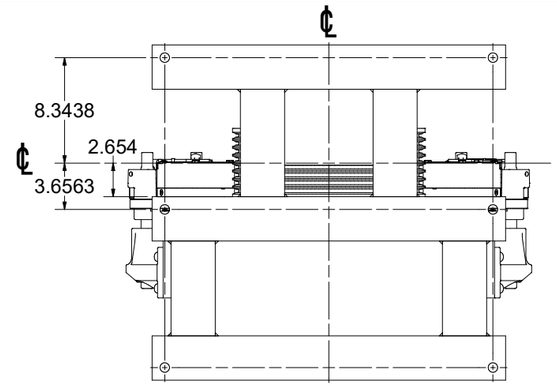

VIEW B-B
SCALE 1 /6
15" TW

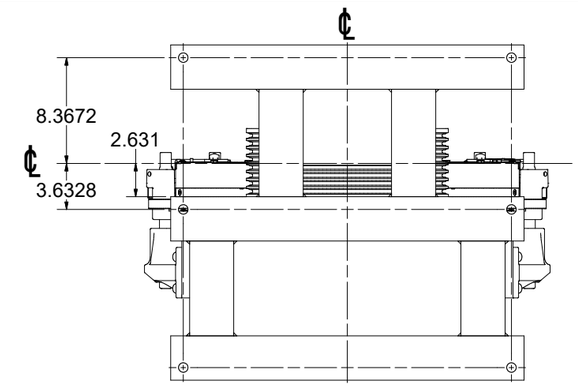

VIEW C-C
SCALE 1 / 6
15.75" TW

NOTE: TRACTION WHEEL CENTERLINE VARIES WITH T.W. SIZE

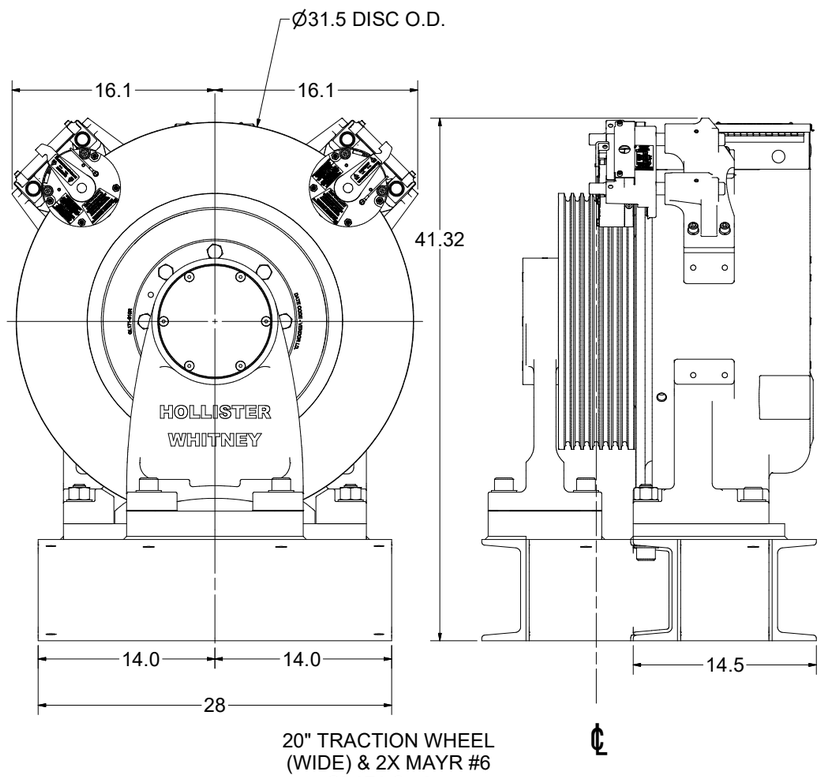

20" TRACTION WHEEL
(WIDE) & 2X MAYR #6
GL171 Series

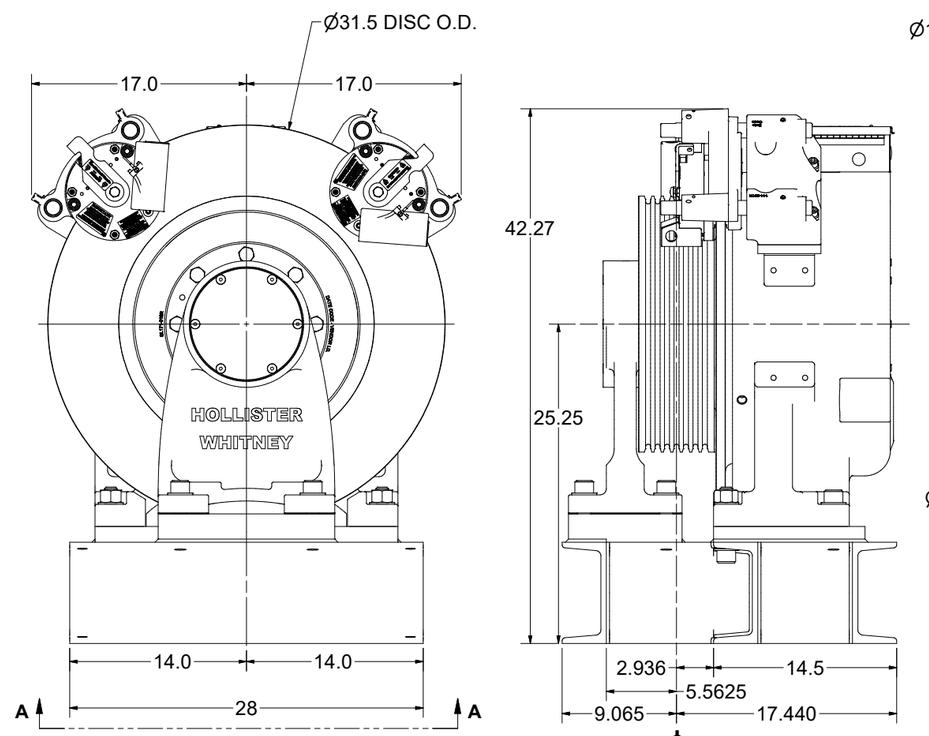

20" TRACTION WHEEL
(WIDE) & 2X MAYR #8
GL171X Series

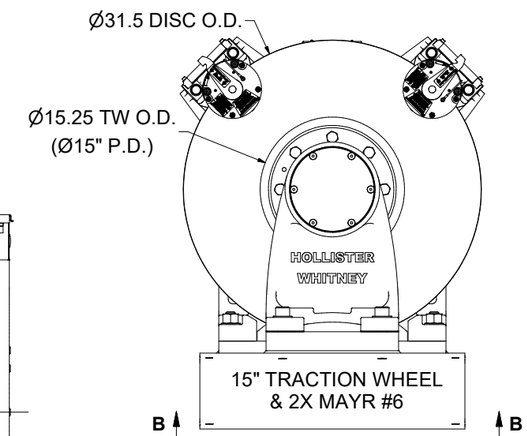

15" TRACTION WHEEL
& 2X MAYR #6

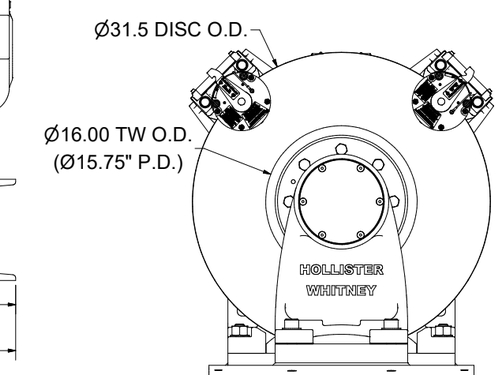

15.75" TRACTION WHEEL
& 2X MAYR #6

C C

WEIGHT: 2420.2 lbmass

SEE PAGE 3 OF 3 FOR PARTS LIST AND APPLICATION DETAIL CHARTS

SEE PAGE 1 OF 3 FOR REVISIONS

THIS DRAWING IS SUPPLIED AS A REPRESENTATION OF THE EQUIPMENT. HOLLISTER-WHITNEY ELEVATOR CO. LLC ("MANUFACTURER") HAS AGREED TO SUPPLY. SLIGHT ADJUSTMENTS MAY OCCUR DURING MANUFACTURING AND INSTALLATION. ANY MODIFICATIONS NOT APPROVED IN WRITING BY MANUFACTURER MAY AFFECT OPERATION, VOIDS ANY WARRANTY AND RELEASES MANUFACTURER OF ALL LIABILITY.
THIS DOCUMENT CONTAINS CONFIDENTIAL AND PROPRIETARY INFORMATION THAT CANNOT BE REPRODUCED OR DIVULGED, IN WHOLE OR IN PART, WITHOUT WRITTEN AUTHORIZATION FROM THE MANUFACTURER.

THIRD ANGLE PROJECTION

HOLLISTER-WHITNEY
ELEVATOR CO. LLC

TITLE: GEARLESS MACHINE w/OUTBOARD STAND

DRAWN BY	SCALE	MATERIAL	REFERENCE TOL.
LTL	1 / 6	SEE PARTS LIST	ALL DIMENSIONS REFERENCE UNLESS OTHERWISE SPECIFIED
SHEET SIZE: D		DATE: 9/14/2011	GL171 SHEET 2 OF 3

ITEM	QTY	PART NUMBER	DESCRIPTION
1	1	GL171B-01	BASE FABRICATION - FINISHED
2	1	GL170-001	BASE HOUSING, MOTOR #GL170
		GL180-001	BASE HOUSING, MOTOR #GL181
3	1	GL171-002	ROTOR ASSEMBLY, MOTOR #GL170, TO 2500# CAP 50% CB
		GL181-002	ROTOR ASSEMBLY, MOTOR #GL181, TO 3500# CAP 50% CB
4	1	GL130-005	BEARING CAP
5	1	GL171-006	OUTBOARD STAND, AC GEARLESS
6	1	GL100-009	15" TW (8 x 3/8" ROPE MAX)
		GL171-010	20" TW (7 x 1/2" ROPE MAX)
		GL100-011	15.75" TW (8 x 3/8" ROPE MAX)
7	1	GL171-018	MAIN SHAFT
8	1	GL185-019	END CAP
9	1	GL171-020	BEARING END CAP
10	8	GL100-073	BODY BOLT
11	1	GL100-088	KEY - STATOR CORE TO BASE
12	1	GL100-089	Bearing, Sealed Double Row Cylindrical Roller
13	1	GL130-090	SEALED SPHERICAL ROLLER BEARING
14	1	GL185-090	BEARING, SEALED SPHERICAL ROLLER
15	4	GL130-092	RETAINING RING - SHAFT
16	1	GL130-093	RETAINING RING - HOUSING
17	3	GL100-094-1	CLAMP - STATOR ASSEMBLY
18	1	GL171-095	KEY - MAIN SHAFT TO ROTOR
19	1	GL181-100	WINDING ASSEMBLY - 28 POLE (1:1 Application) SEE BELOW
		GL171-100	WINDING ASSEMBLY - 28 POLE (1:1 Application) SEE BELOW
		GL170-100	WINDING ASSEMBLY - 28 POLE (2:1 IN 1:1 APL.) SEE BELOW
20	1	GL130-144	DISC BRAKE (MAYR #8) -- THRU 1875# CAP 50% CB
	2	GL100-146	DISC BRAKE (MAYR #6) -- 1876# TO 2500# CAP 50% CB
	2	GL130-144	DISC BRAKE (MAYR #8) -- 2501# TO 3500# CAP 50% CB
21	1	GL100-159	ELECTRICAL ENCLOSURE, HOFFMAN A806CH - MODIFIED
22	1	GL100-165	FELT DUST SEAL
23	2	1 - 8 UNC x 5"	SOCKET HEAD CAP SCREW
24	6	1 - 8 UNC x 3.5"	SOCKET HEAD CAP SCREW
25	2	1 - 8 UNC NUT	HEAVY HEX NUT
26	10	1" WASHER	SAE WASHER
27	8	M18 LOCKWASHER-DIN 127B	HELICAL SPRING LOCK WASHER - BODY BOLT
28	2	3/4-10 UNC x 0.75	SET SCREW (HOLE PLUG)
29	1	1/2-13 UNC x 0.5	SET SCREW (HOLE PLUG)
30	6	3/8-16 UNC x 4	FLAT HEAD CAP SCREWS
31	8	3/8 - 16 UNC - 1 1/2	SOCKET HEAD CAP SCREW
32	3	3/8 - 16 UNC - 1	SOCKET HEAD CAP SCREW
33	4	3/8-16 UNC x 0.625	WHIZ BOLT
34	8	0.375 WASHER	CAP SCREW LOCK WASHER
35	4	#8-32 x 1/4"	SOCKET HEAD CAP SCREW
36	4	#8 WASHER	INT. TOOTH LOCKWASHER
37	1	ECN-113	ID# 81800-61 2048PPR 50mm HEIDENHAIN ENCODER
38	AS NEC.	GL171-157-05	OUTBOARD STAND SHIM STOCK - 0.005"
		GL171-157-10	OUTBOARD STAND SHIM - 0.010"
		GL171-157-31	OUTBOARD STAND SHIM STOCK - 0.031"
39	4	#6 U x 0.3125	DRIVE SCREW
40	1	P-173	MOTOR TAG - PMAC GEARLESS MACHINE
41	1 or 2	P-242	TAG, GL171 & GL181 - BRAKE RATINGS FOR MAYR #8
	2	P-212	TAG, GL171 - BRAKE RATINGS FOR MAYR #6

						ROPED 1:1			ROPED 2:1		
MACHINE #	WINDING P/N	COIL/WINDING EFFICIENCY (%)	FRAME/MAGNET SIZE (mm)	VOLTAGE (Vac)	MACHINE SPEED (rpm)	CAR SPEED 20" (fpm)	CAR SPEED 15.75" (fpm)	CAR SPEED 15" (fpm)	CAR SPEED 20" (fpm)	CAR SPEED 15.75" (fpm)	CAR SPEED 15" (fpm)
THESE APPLICATIONS USING WINDINGS DESIGNED FOR 1:1											
GL171-20L	GL171-170-200	87	170	170	38.2	200	158	150	100	79	75
GL171-20H	GL171-360-200	87	170	360	38.2	200	158	150	100	79	75
GL171X-35H	GL181-380-350	87	170	380	66.8	350	276	263	175	138	131
GL171-40L	GL171-170-400	87	170	170	76.4	400	315	300	200	158	150
THESE APPLICATIONS USING WINDINGS DESIGNED FOR 2:1						ROPED 1:1			ROPED 2:1		
GL171-70L	GL170-170-350	93.9	170	170	178.3	933	735	700	467	368	350
GL171-70H	GL170-360-350	94	170	360	178.3	933	735	700	467	368	350

	TRACTION WHEEL	ROPING	COUNTER BALANCE %					BRAKES REQUIRED
			50	47.5	45	42.5	40	
			CAPACITY (LBS)					
GL171-70	15"	1:1	2500	2375	2250	2150	2075	1X MAYR #8
		2:1	5000	4750	4525	4325	4150	
	15.75"	1:1	2375	2250	2150	2050	1975	
		2:1	4750	4525	4325	4125	3950	
	20"	1:1	1875	1775	1700	1625	1550	
		2:1	3750	3550	3400	3250	3125	
GL171-40 GL171-20	15"	1:1	3325	3225	3125	3025	2925	2X MAYR #6
		2:1	6650	6450	6250	6050	5875	
	15.75"	1:1	3150	3050	2975	2875	2800	
		2:1	6325	6125	5950	5750	5600	
	20"	1:1	2500	2400	2325	2250	2200	
		2:1	5000	4825	4675	4525	4400	
GL171X-35	15"	1:1	4650	4425	4225	4050	3875	2X MAYR #8
		2:1	9300	8850	8450	8100	7750	
	15.75"	1:1	4425	4225	4025	3850	3700	
		2:1	8850	8450	8050	7700	7400	
	20"	1:1	3500	3325	3175	3025	2900	
		2:1	7000	6650	6350	6050	5800	

SEE PAGE 1 OF 3 FOR REVISIONS

WEIGHT:

HOLLISTER-WHITNEY
ELEVATOR CO. LLC

TITLE: GEARLESS MACHINE w/OUTBOARD STAND

THIS DRAWING IS SUPPLIED AS A REPRESENTATION OF THE EQUIPMENT HOLLISTER-WHITNEY ELEVATOR CO. LLC ("MANUFACTURER") HAS AGREED TO SUPPLY. SLIGHT ADJUSTMENTS MAY OCCUR DURING MANUFACTURING AND INSTALLATION. ANY MODIFICATIONS NOT APPROVED IN WRITING BY MANUFACTURER MAY AFFECT OPERATION, VOIDS ANY WARRANTY AND RELEASES MANUFACTURER OF ALL LIABILITY.
THIS DOCUMENT CONTAINS CONFIDENTIAL AND PROPRIETARY INFORMATION THAT CANNOT BE REPRODUCED OR DIVULGED, IN WHOLE OR IN PART, WITHOUT WRITTEN AUTHORIZATION FROM THE MANUFACTURER.

THIRD ANGLE PROJECTION

DRAWN BY	SCALE	MATERIAL	REFERENCE TOL.
LTL		SEE PARTS LIST	ALL DIMENSIONS REFERENCE UNLESS OTHERWISE SPECIFIED
SHEET SIZE: D		DATE: 9/14/2011	GL171 SHEET 3 OF 3

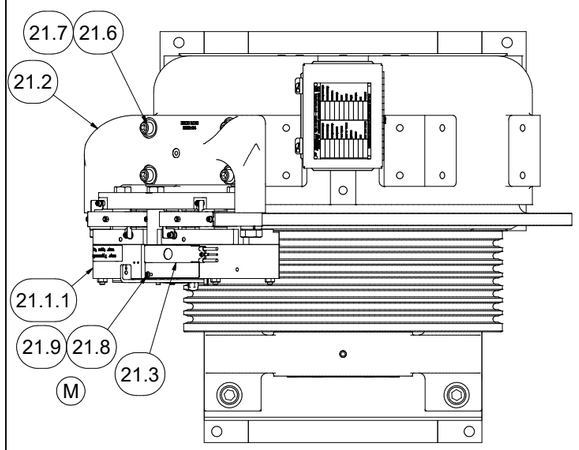

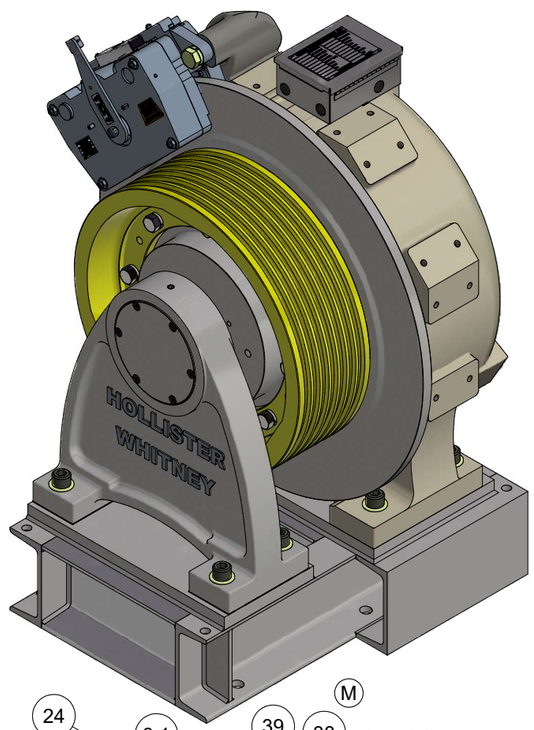

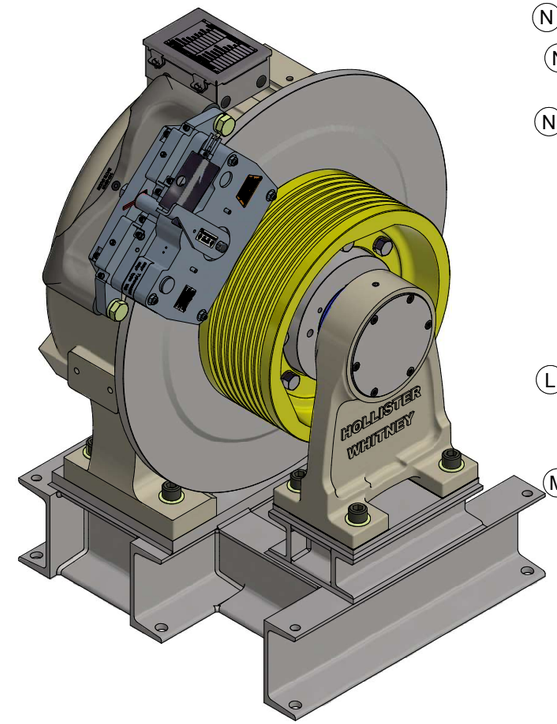

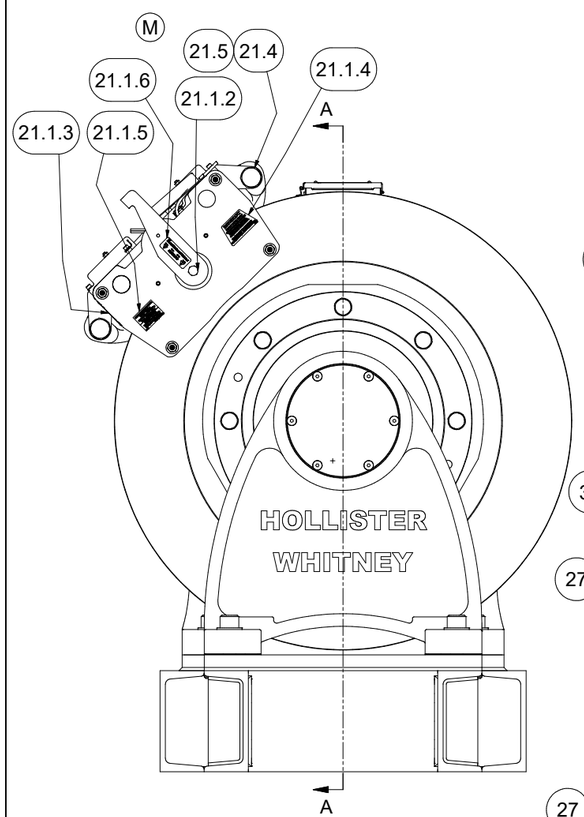

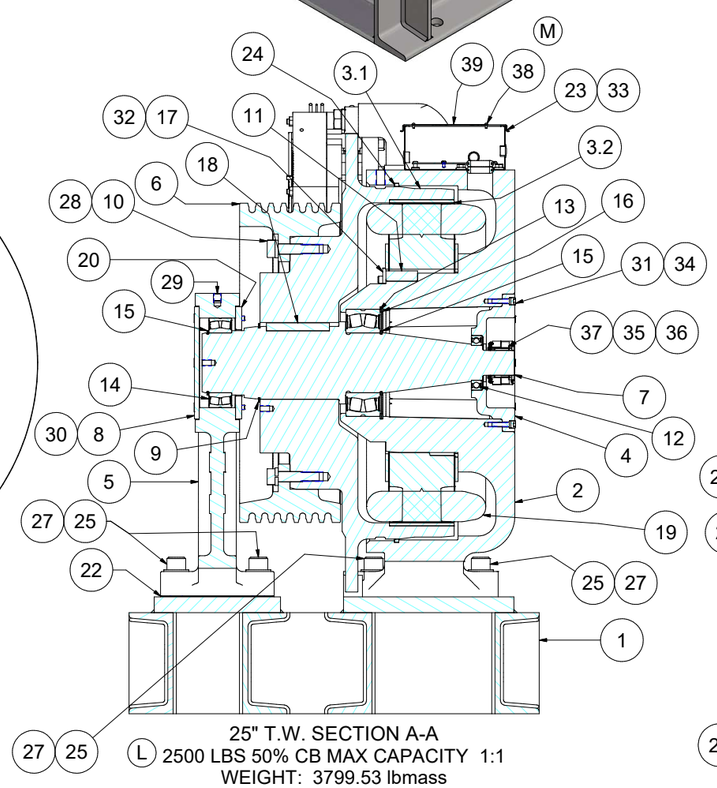

25" T.W. SECTION A-A
(L) 2500 LBS 50% CB MAX CAPACITY 1:1
WEIGHT: 3799.53 lbmass

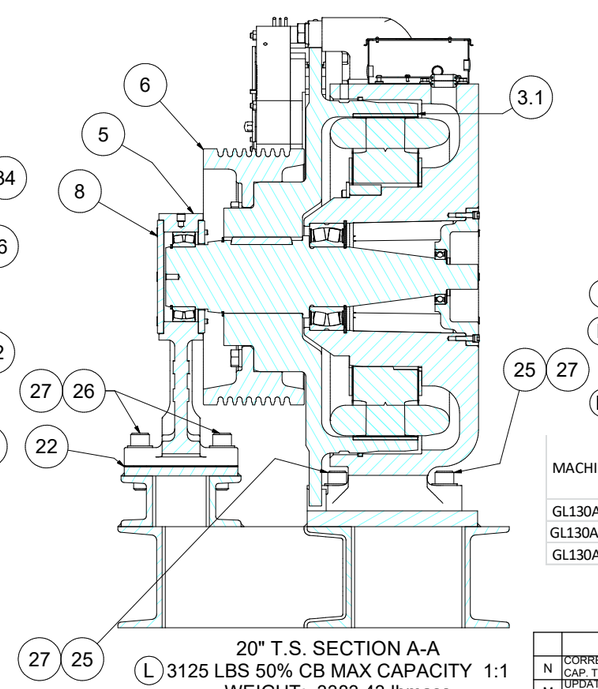

20" T.S. SECTION A-A
(L) 3125 LBS 50% CB MAX CAPACITY 1:1
WEIGHT: 3383.43 lbmass

	ITEM	QTY	PART NUMBER	DESCRIPTION
	1	1	GL130AB-01	FINISHING BASE, GL130A, 25" T.S.
		1	GL130AB-03	FINISHING BASE, GL130A, 20" T.S.
	2	1	GL130A-001	BASE HOUSING, MOTOR #GL130A
N	3	1	GL130A-002	ROTOR ASSEMBLY - #GL130A, 25" T.S.
		1	GL130A-002-1	ROTOR ASSEMBLY - #GL130A, 20" T.S.
N	3.1	1	GL130A-004	ROTOR - GL130A, 25" T.S.
		1	GL130A-004-1	ROTOR - GL130A, 20" T.S.
	3.2	40	GL260-099	PERMANENT MAGNET - #GL260 & GL130A MOTORS
	4	1	GL130A-005	BEARING CAP
N	5	1	GL185-006	OUTBOARD STAND, 25" T.S.
		1	GL171-006	OUTBOARD STAND, 20" T.S.
	6	1	GL185-008	SHEAVE, 25"
		1	GL130A-008	SHEAVE, 20"
	7	1	GL130A-018	MAIN SHAFT - GL130A 1:1 MACHINE
	8	1	GL185-019	END CAP, OUTBOARD STAND, 25" T.W.
		1	GL171-019	END CAP, OUTBOARD STAND, 20" T.W.
	9	1	GL185-020	RETAINING RING - ROTOR
	10	8	GL185-073	BODY BOLT
	11	1	GL100-088	KEY - STATOR CORE TO BASE
	12	1	GL185-089	BEARING, SEALED SR DEEP GROOVE BALL
	13	1	GL130-090	SEALED SPHERICAL ROLLER BEARING
	14	1	GL185-090	BEARING, SEALED SPHERICAL ROLLER
	15	2	GL130-092	RETAINING RING - SHAFT
	16	1	GL130-093	RETAINING RING - HOUSING
L	17	3	GL100-094-1	CLAMP - STATOR ASSEMBLY
	18	1	GL185-095	KEY - MAIN SHAFT TO ROTOR
	19	1	GL130A-100	WINDING ASSEMBLY
	20	1	GL185-104	INBOARD CAP, OUTBOARD STAND, 25" T.W.
	21	1	GL185-147	DISC BRAKE (MAYR 10.1) ASSEMBLY
	21.1	1	GL185-147-115S	MAYR #10.1 BRAKE WITH STANDARD STICKERS
M	21.1.1	1	GL185-147-115	MAYR #10.1 BRAKE - RSD10/894.510.53S #8252206
	21.1.2	1	142-050	BLACK VINYL CAP
	21.1.3	1	P-175	TAG, GEARLESS MACHINE BRAKE AIRGAP DATA
	21.1.4	1	P-190	ROTOR INSPECTION & BRAKE BURNISHING STICKER
	21.1.5	1	P-214	TAG, GL130A, GL185 & GL260 - BRAKE RATINGS
	21.1.6	1	P-229	CAUTION LABEL - DO NOT ADJUST THIS NUT
	21.2	1	147-001	BRAKE BASE - LARGE FRAME GL MACHINE
	21.3	1	147-003	COVER - MAYR #10.1 (GL185-147) ELECTRICAL
	21.4	2	1" - 8 UNC x 3 1/2"	HEX CAP SCREW
	21.5	2	1" WASHER	STANDARD LOCK WASHER
	21.6	4	5/8-11 UNC x 2.5	SOCKET HEAD CAP SCREW
	21.7	4	5/8 WASHER	STANDARD WASHER
	21.8	1	M4 x 0.7 x 8mm	SOCKET HEAD CAP SCREW (METRIC)
	21.9	1	#8 WASHER	STANDARD WASHER
	21.10	AS	143-026	BRAKE HOUSING SHIM - 0.03" (NOT SHOWN)
		NEC	143-027	BRAKE HOUSING SHIM - 0.06" (NOT SHOWN)
	22	AS NEC	GL185-157-05	OUTBOARD STAND SHIM - 0.005" GL185 A-STAND, 25" T.W.
			GL185-157-10	OUTBOARD STAND SHIM - 0.010" GL185 A-STAND, 25" T.W.
			GL185-157-31	OUTBOARD STAND SHIM - 0.031" GL185 A-STAND, 25" T.W.
		AS NEC	GL171-157-05	OUTBOARD STAND SHIM - 0.005" GL171 A-STAND, 20" T.W.
			GL171-157-10	OUTBOARD STAND SHIM - 0.010" GL171 A-STAND, 20" T.W.
			GL171-157-31	OUTBOARD STAND SHIM - 0.031" GL171 A-STAND, 20" T.W.
	23	1	GL100-159	HOFFMAN ELECTRICAL ENCLOSURE
	24	1	GL100-165-1	FELT DUST SEAL
	25	8	1-8 UNC - 4	SH CAP SCREW, GL130A, 25" T.W., BASE & A-STAND
		4		SH CAP SCREW, GL130A1, 20" T.W., BASE ONLY
	26	4	1-8 UNC - 3.5	SH CAP SCREW, GL130A1, 20" T.W., GL 171 A-STAND
	27	8	1 WASHER	SAE WASHER
	28	8	13/16 WASHER	Heavy Helical Spring Lock Washers(Inch Series)
	29	1	5/8-11 UNC x 0.625	Set Screw - Flat Point
	30	6	3/8-16 UNC x 4	FLAT HEAD CAP SCREWS
	31	8	3/8 - 16 UNC x 1.5	SOCKET HEAD CAP SCREW
L	32	3	3/8 - 16 UNC x 1.25	SOCKET HEAD CAP SCREW
	33	4	3/8-16 UNC x 0.5	WHIZ BOLT
L	34	8	3/8 Lock Washers	High-Collar Helical Spring Lock Washers
	35	4	No. 8 - 32 UNC - 1/4	Socket Head Cap Screw
	36	4	#8 LOCK WASHER	EXT. TOOTH LOCK WASHER
	37	1	ECN 113 52810061	50mm HEIDENHAIN ENCODER
M	38	4	#6 U x 0.3125	DRIVE SCREW
	39	1	P-173	MOTOR TAG - PMAC GEARLESS MACHINE

MACHINE #	WINDING P/N	COIL/WINDING EFFICIENCY (%)	FRAME/MAGNET SIZE (mm)	VOLTAGE (Vac)	MACHINE SPEED (RPM)	CAR SPEED 20" (fpm)	CAR SPEED 25" (fpm)
GL130A-20L	GL130A-170-200	90	130A/130	170	38.2	200	250
GL130A-20H	GL130A-360-200	90	130A/130	360	38.2	200	250
GL130A-40L	GL130A-170-400	91	130A/130	170	76.4	400	500

WEIGHT: 3799.5 lbmass

			L	3X GL100-094-1 WAS 1X GL185-094, 3X 3/8x1HHCS	LTL 7/2/19
N	CORRECT PARTS LIST CAP. TYPO, PUR #1714	LTL 10/12/22		WAS 6X, 8X 3/8 WASHER WAS 14X, & UPDATE	
M	UPDATE BRAKE PARTS LIST & TAGS, PUR #1260	LTL 1/7/20		GL130A (1:1) WINDING CAPACITIES, PUR #1111	

THIS DRAWING IS SUPPLIED AS A REPRESENTATION OF THE EQUIPMENT HOLLISTER-WHITNEY ELEVATOR CO. LLC ("MANUFACTURER") HAS AGREED TO SUPPLY. SLIGHT ADJUSTMENTS MAY OCCUR DURING MANUFACTURING AND INSTALLATION. ANY MODIFICATIONS NOT APPROVED IN WRITING BY MANUFACTURER MAY AFFECT OPERATION, VOIDS ANY WARRANTY AND RELEASES MANUFACTURER OF ALL LIABILITY.

THIS DOCUMENT CONTAINS CONFIDENTIAL AND PROPRIETARY INFORMATION THAT CANNOT BE REPRODUCED OR DIVULGED, IN WHOLE OR IN PART, WITHOUT WRITTEN AUTHORIZATION FROM THE MANUFACTURER.

THIRD ANGLE PROJECTION

HOLLISTER-WHITNEY
ELEVATOR CO. LLC

TITLE: GEARLESS MACHINE

DRAWN BY	SCALE	MATERIAL	REFERENCE TOL.
LTL	1 / 6	SEE PARTS LIST	ALL DIMENSIONS REFERENCE UNLESS OTHERWISE SPECIFIED

SHEET SIZE	DATE	
D	11/11/2011	GL130A SHEET 1 OF 2

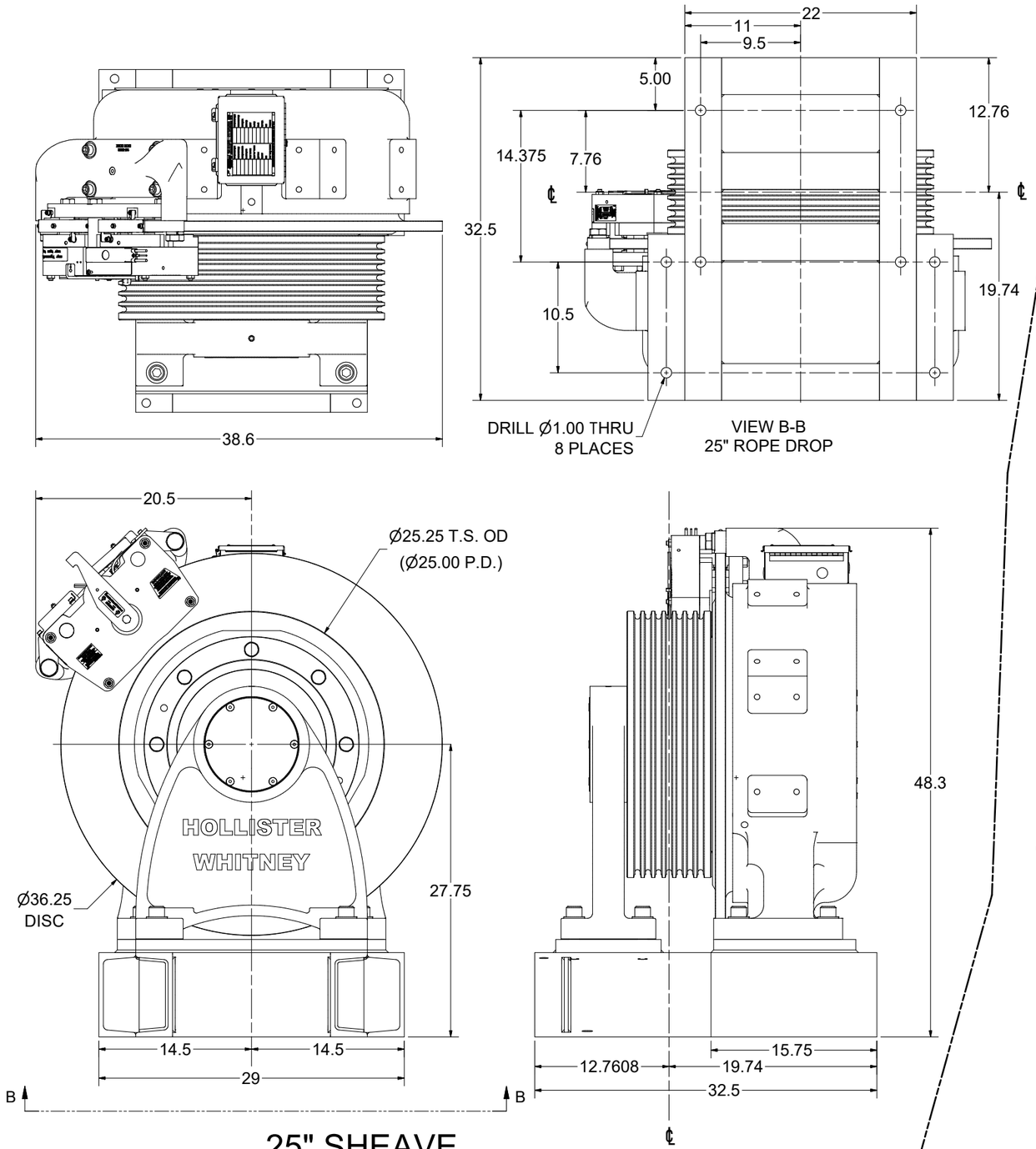

25" SHEAVE
2500# CAP. MAX @ 50%

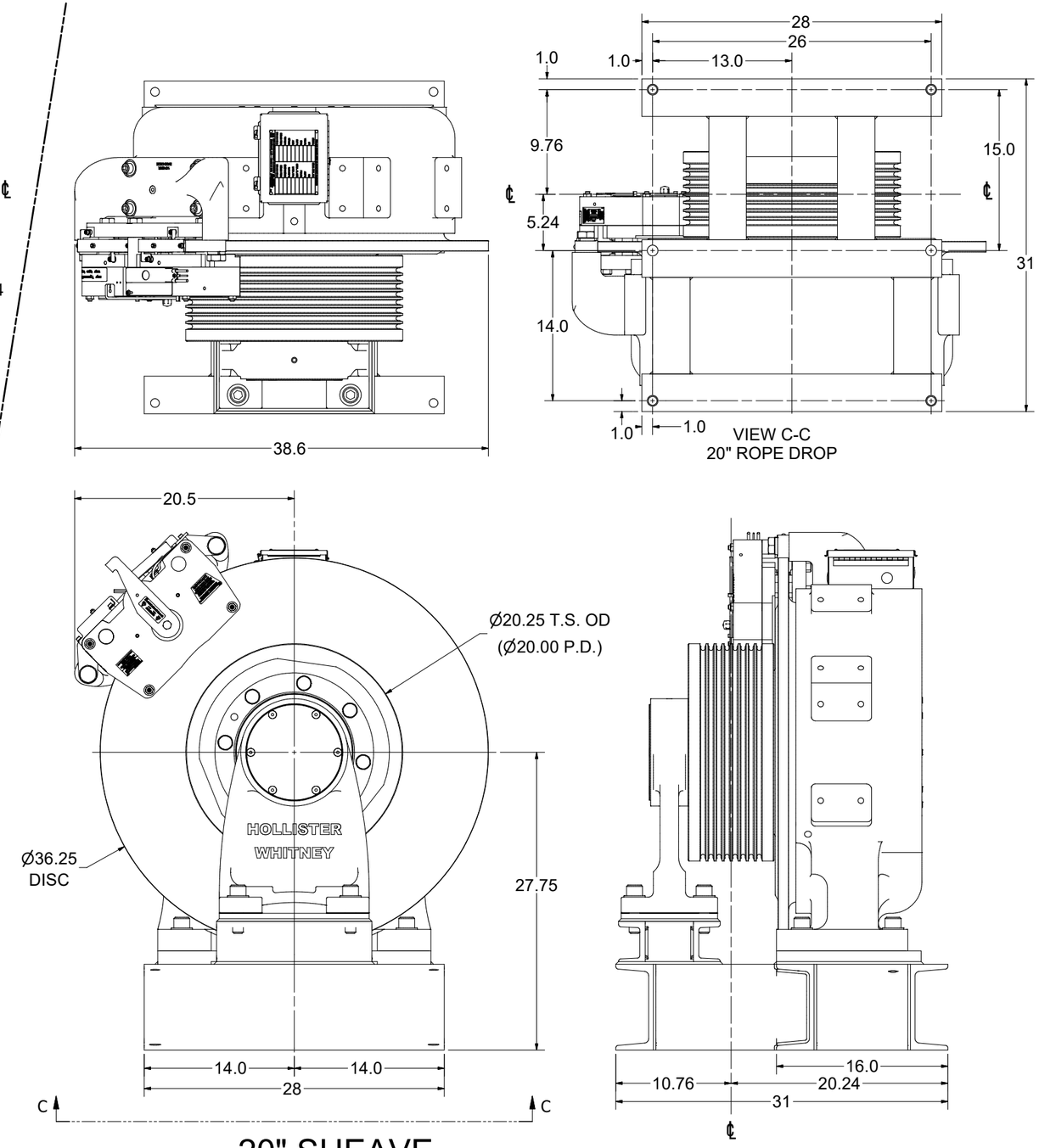

20" SHEAVE
3125# CAP. MAX @ 50%

SEE OTHER SIDE FOR UPDATES

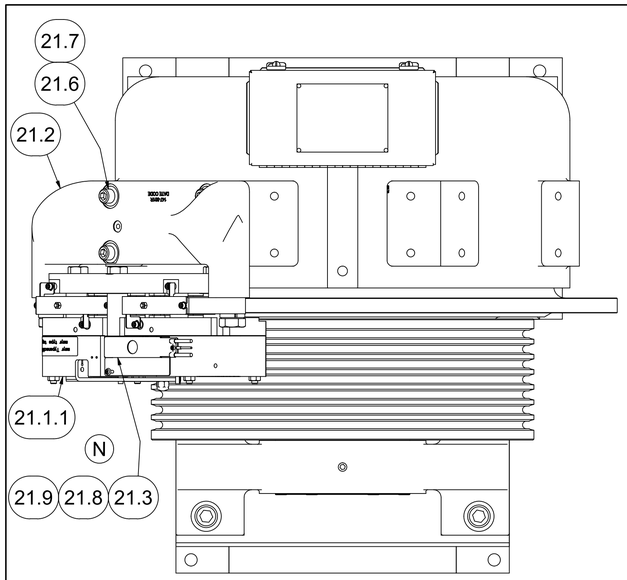

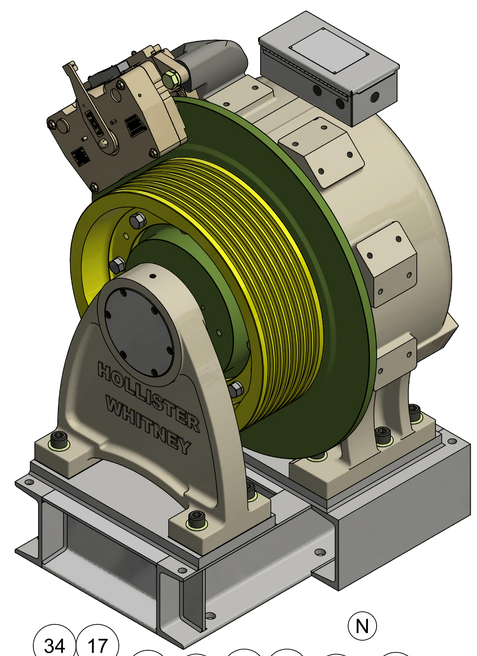

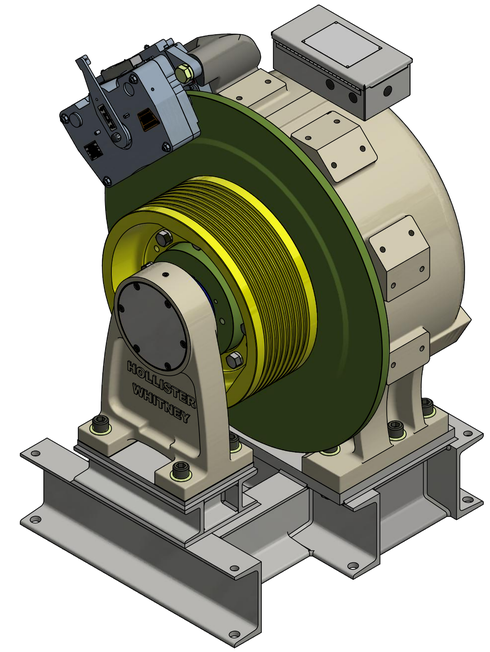

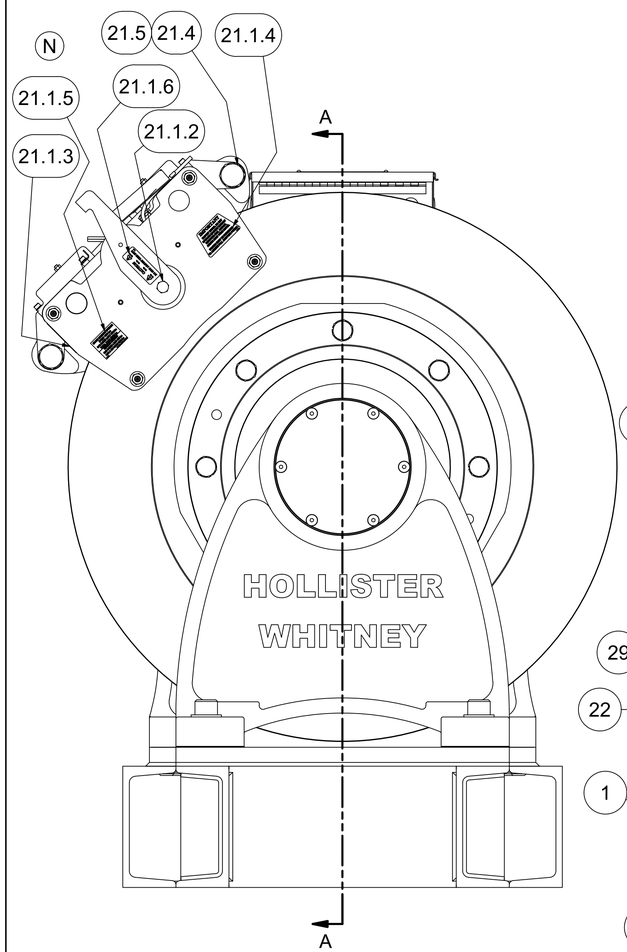

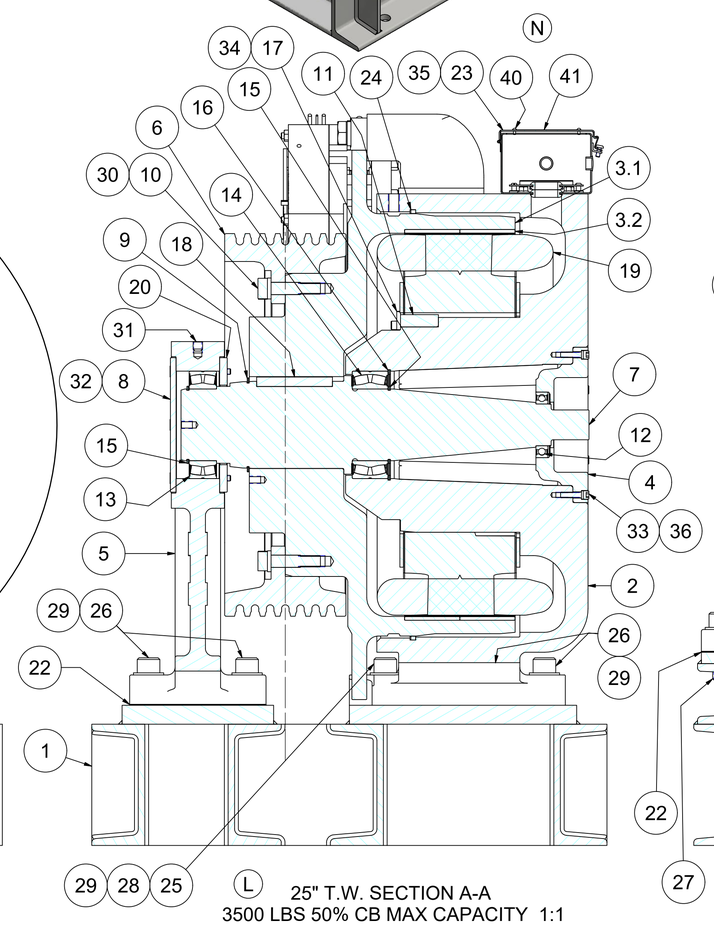

L 25" T.W. SECTION A-A
3500 LBS 50% CB MAX CAPACITY 1:1
WEIGHT: 4265.51 lbmass

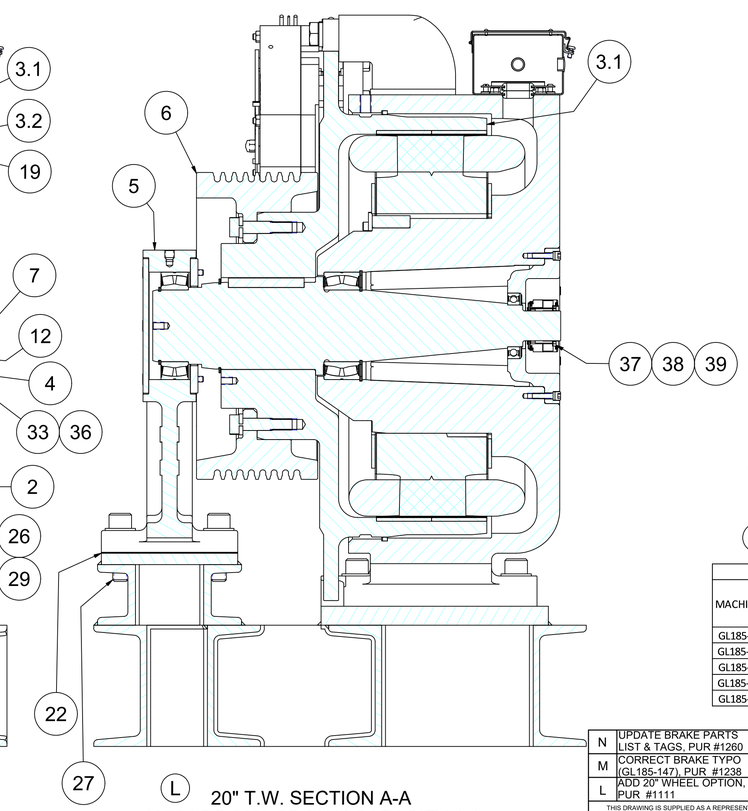

L 20" T.W. SECTION A-A
4375 LBS 50% CB MAX CAPACITY 1:1
WEIGHT: 3871.70 lbmass

	ITEM	QTY	PART NUMBER	DESCRIPTION
	1	1	GL185B-01	FINISHING BASE, GL185, 25" T.W. 3500 LBS CAP.
		1	GL185B-03	FINISHING BASE, GL185, 20" T.W. 4375 LBS CAP.
	2	1	GL185-001	BASE HOUSING, MOTOR #GL185
	3	1	GL185-002	ROTOR ASSEMBLY - #GL185, 25" T.W. 3000 LBS CAP.
		1	GL185-002-1	ROTOR ASSEMBLY - #GL185, 20" T.W. 3750 LBS CAP.
	3.1	1	GL185-004	ROTOR - #GL185, 25" T.W. 3500 LBS CAP.
		1	GL185-004-1	ROTOR - #GL185, 20" T.W. 4375 LBS CAP.
	3.2	80	GL185-099	PERMANENT MAGNET - MOTOR #GL185
	4	1	GL260-005	BEARING CAP
	5	1	GL185-006	OUTBOARD STAND, AC GEARLESS, 25" T.W.
		1	GL171-006	OUTBOARD STAND, AC GEARLESS, 20" T.W.
	6	1	GL185-008	25" TRACTION WHEEL
		1	GL130A-008	20" TRACTION WHEEL
	7	1	GL185-018	MAIN SHAFT - GL185 1:1 MACHINE
	8	1	GL185-019	END CAP, OUTBOARD STAND, 25" T.W.
	9	1	GL185-020	RETAINING RING - ROTOR
	10	8	GL185-073	BODY BOLT
	11	1	GL100-088	KEY - STATOR CORE TO BASE
	12	1	GL185-089	BEARING, SEALED SINGLE ROW DEEP GROOVE BALL
	13	1	GL185-090	BEARING, SEALED SPHERICAL ROLLER
	14	1	GL185-091	BEARING, SEALED SPHERICAL ROLLER
	15	2	GL130-092	RETAINING RING - SHAFT
	16	1	GL100-093	RETAINING RING - HOUSING
L	17	3	GL100-094-1	CLAMP - STATOR ASSEMBLY
	18	1	GL185-095	KEY - MAIN SHAFT TO ROTOR
	19	1	GL185-100	WINDING ASSEMBLY - 40 POLE
	20	1	GL185-104	INBOARD CAP, OUTBOARD STAND
	21	1	GL185-147	DISC BRAKE (MAYR 10) ASSEMBLY
	21.1	1	GL185-147-115S	MAYR #10.1 BRAKE WITH STANDARD STICKERS
M	21.1.1	1	GL185-147-115	MAYR #10.1 BRAKE - RSD10/894.510.53S #8252206
N	21.1.2	1	142-050	BLACK VINYL CAP
	21.1.3	1	P-175	TAG, GEARLESS MACHINE BRAKE AIRGAP DATA
	21.1.4	1	P-190	ROTOR INSPECTION & BRAKE BURNISHING STICKER
	21.1.5	1	P-214	TAG, GL130A, GL185 & GL260 - BRAKE RATINGS
	21.1.6	1	P-229	CAUTION LABEL - DO NOT ADJUST THIS NUT
	21.2	1	147-001	BRAKE BASE - LARGE FRAME GL MACHINE
	21.3	1	147-003	COVER - MAYR #10.1 (GL185-147) ELECTRICAL
	21.4	2	1" - 8 UNC x 3 1/2"	HEX CAP SCREW
	21.5	2	1" WASHER	STANDARD LOCK WASHER
	21.6	4	5/8-11 UNC x 2.5	SOCKET HEAD CAP SCREW
	21.7	4	5/8 WASHER	STANDARD WASHER
	21.8	1	M4 x 0.7 x 8mm	SOCKET HEAD CAP SCREW (METRIC)
	21.9	1	#8 WASHER	STANDARD WASHER
	21.10	AS NEC	143-026	BRAKE HOUSING SHIM - 0.03" (NOT SHOWN)
			143-027	BRAKE HOUSING SHIM - 0.06" (NOT SHOWN)
	22	1	GL185-159	HOFFMAN ELECTRICAL ENCLOSURE, A12064CH MODIFIED
	23	AS NEC	GL185-157-05	OUTBOARD STAND SHIM - 0.005" GL185 A-STAND, 25" T.W.
			GL185-157-10	OUTBOARD STAND SHIM - 0.010" GL185 A-STAND, 25" T.W.
			GL185-157-31	OUTBOARD STAND SHIM - 0.031" GL185 A-STAND, 25" T.W.
		AS NEC	GL171-157-05	OUTBOARD STAND SHIM - 0.005" GL171 A-STAND, 20" T.W.
			GL171-157-10	OUTBOARD STAND SHIM - 0.010" GL171 A-STAND, 20" T.W.
			GL171-157-31	OUTBOARD STAND SHIM - 0.031" GL171 A-STAND, 20" T.W.
	24	1	GL100-165-1	FELT DUST SEAL
	25	2	1 - 8 UNC x 5.5"	SOCKET HEAD CAP SCREW
	26	8	1 - 8 UNC x 4"	SOCKET HEAD CAP SCREW, 25" T.W., BASE & A-STAND
		4		SOCKET HEAD CAP SCREW, 20" T.W., BASE ONLY
	27	4	1 - 8 UNC x 3.5"	SOCKET HEAD CAP SCREW, 20" T.W., GL 171 A-STAND
	28	2	1 - 8 UNC NUT	HEAVY HEX NUT
	29	12	1" WASHER	SAE WASHER
	30	8	13/16 WASHER	HEAVY LOCK WASHER
	31	1	5/8-11 UNC x 0.625	HALF DOG SET SCREW
	32	6	3/8-16 UNC x 4	FLAT HEAD CAP SCREWS
	33	6	3/8 - 16 UNC x 1.5	SOCKET HEAD CAP SCREW
L	34	3	3/8 - 16 UNC x 1.25	SOCKET HEAD CAP SCREW
	35	4	3/8 - 16 UNC x 0.625"	WHIZ BOLT
L	36	6	0.375 WASHER	CAP SCREW LOCK WASHER
	37	1	ECN 113 52810061	50mm HEIDENHAIN ENCODER
	38	4	#8-32 x 1/4"	SOCKET HEAD CAP SCREW
	39	4	#8 LOCK WASHER	EXT. TOOTH LOCK WASHER
N	40	4	#6 U x 0.3125	DRIVE SCREW
	41	1	P-173	MOTOR TAG - PMAC GEARLESS MACHINE

MACHINE WINDINGS GL185-100

MACHINE #	WINDING P/N	COIL/WINDING EFFICIENCY (%)	FRAME/MAGNET SIZE (mm)	VOLTAGE (Vac)	MACHINE SPEED (RPM)	CAR SPEED 25" TW(fpm)	CAR SPEED 20" TW(fpm)
GL185-35L	GL185-170-350	90	185	170	53.5	350	280
GL185-35H	GL185-360-350	90	185	360	53.5	350	280
GL185-50L	GL185-170-500	90	185	170	76.4	500	400
GL185-50H	GL185-360-500	90	185	360	76.4	500	400
GL185-70L	GL185-170-700	90	185	170	107.0	700	560

L

WEIGHT: 4265.5 lbmass

N	UPDATE BRAKE PARTS LIST & TAGS, PUR #1260	LTL 1/7/20	L	3X GL100-094-1 WAS 1X GL185-094, 3X 3/8x1.25	LTL 10/23/19
M	CORRECT BRAKE TYPO (GL185-147), PUR #1238	LTL 11/21/19		SHCS WAS 6X, 6X 3/8 WASHER WAS 12X, &	
L	ADD 20" WHEEL OPTION, PUR #1111	LTL 10/23/19		UPDATE GL185 (1:1) CAPACITIES, PUR #1111	

THIS DRAWING IS SUPPLIED AS A REPRESENTATION OF THE EQUIPMENT HOLLISTER-WHITNEY ELEVATOR CO. LLC ("MANUFACTURER") HAS AGREED TO SUPPLY. SLIGHT ADJUSTMENTS MAY OCCUR DURING MANUFACTURING AND INSTALLATION. ANY MODIFICATIONS NOT APPROVED IN WRITING BY MANUFACTURER MAY AFFECT OPERATION, VOIDS ANY WARRANTY AND RELEASES MANUFACTURER OF ALL LIABILITY.
THIS DOCUMENT CONTAINS CONFIDENTIAL AND PROPRIETARY INFORMATION THAT CANNOT BE REPRODUCED OR DIVULGED, IN WHOLE OR IN PART, WITHOUT WRITTEN AUTHORIZATION FROM THE MANUFACTURER.

THIRD ANGLE PROJECTION

HOLLISTER-WHITNEY
ELEVATOR CO. LLC

TITLE: GEARLESS MACHINE

DRAWN BY	SCALE	MATERIAL	REFERENCE TOL.
LTL	1 / 5	SEE PARTS LIST	ALL DIMENSIONS REFERENCE UNLESS OTHERWISE SPECIFIED
SHEET SIZE: D		DATE: 8/8/2011	GL185

SHEET 1 OF 3

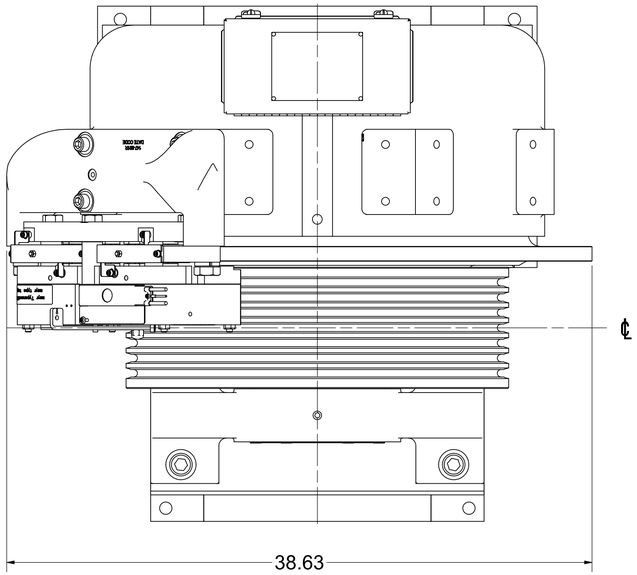

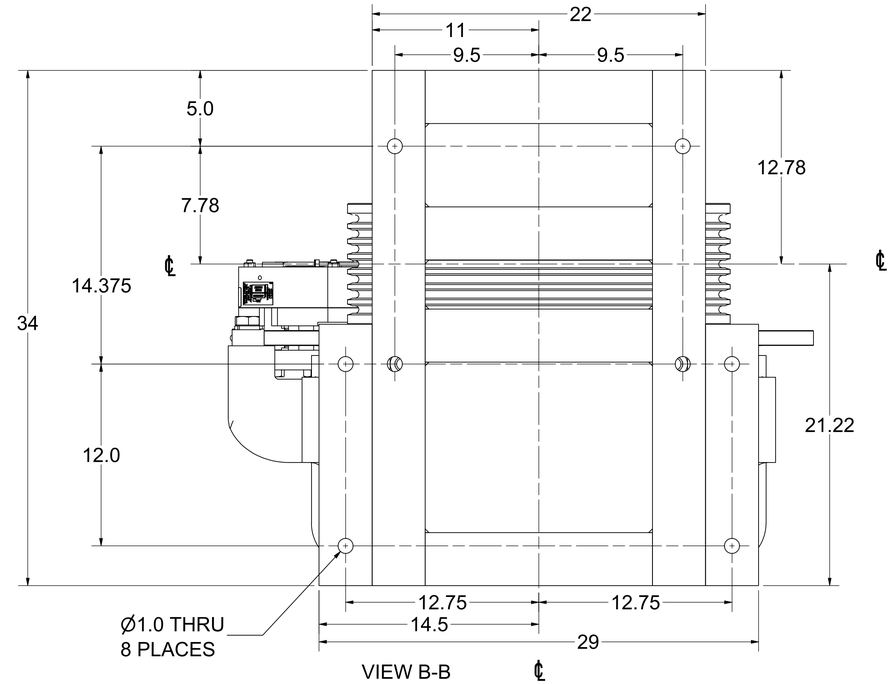

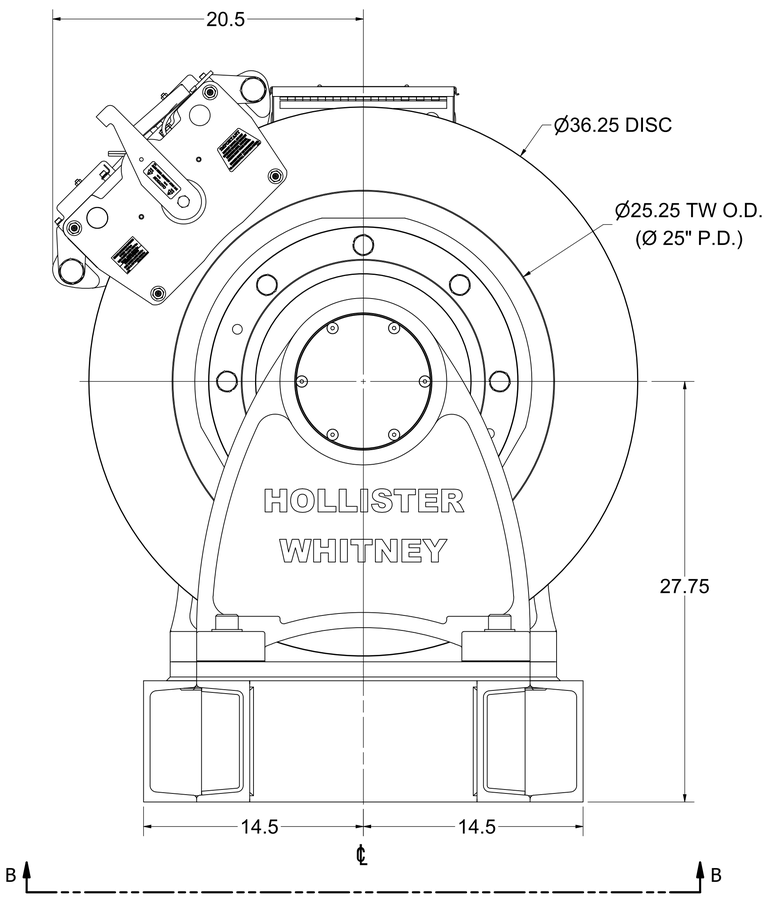

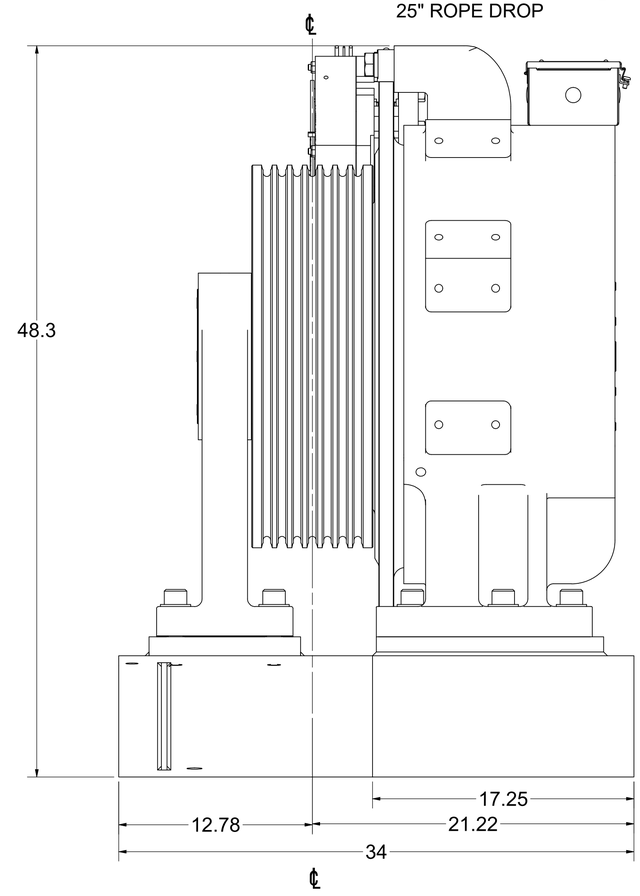

MACHINE W/25" TW
3500 LBS 50% CB MAX CAPACITY 1:1
WEIGHT: 4266 lbmass

SEE PAGE 1 FOR REVISIONS

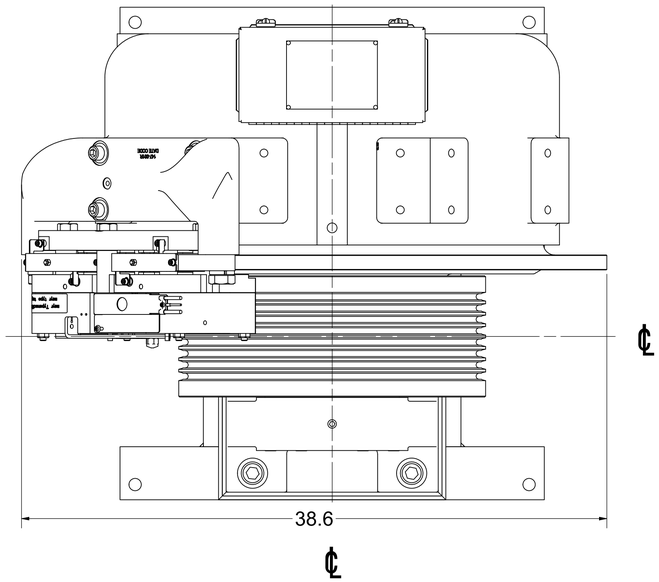

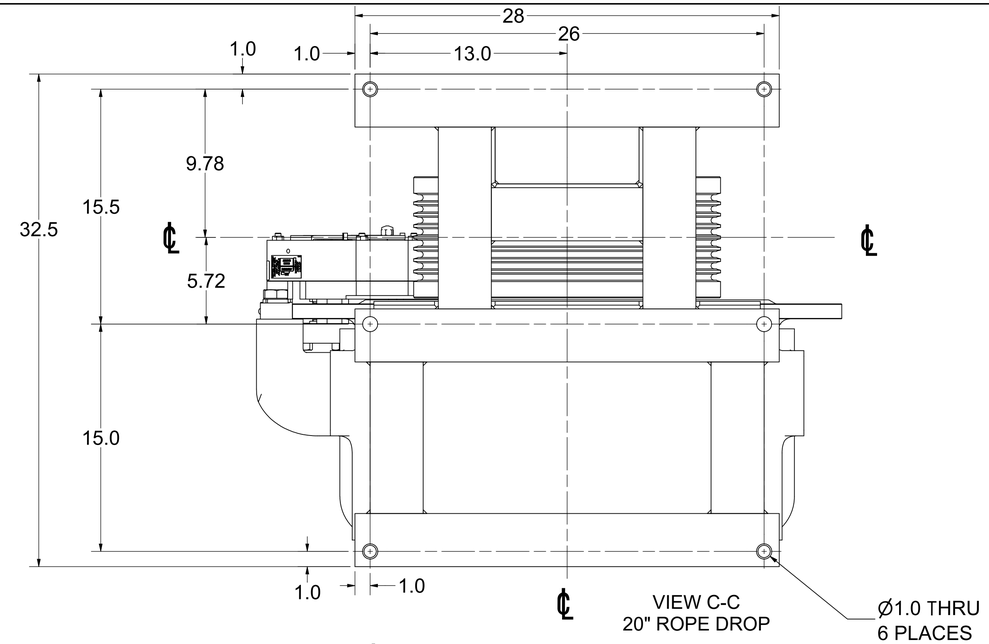

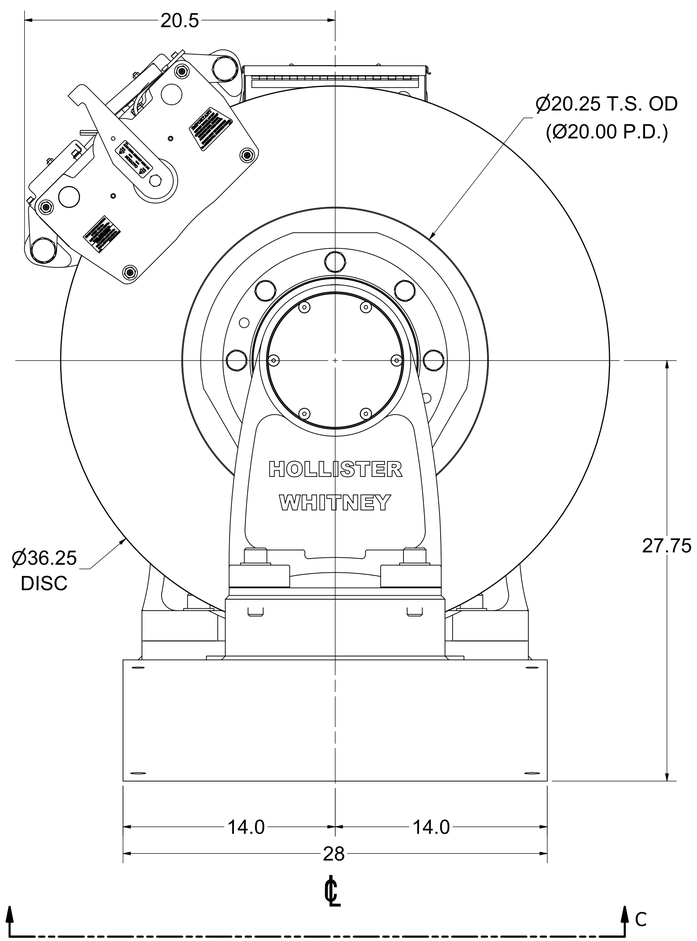

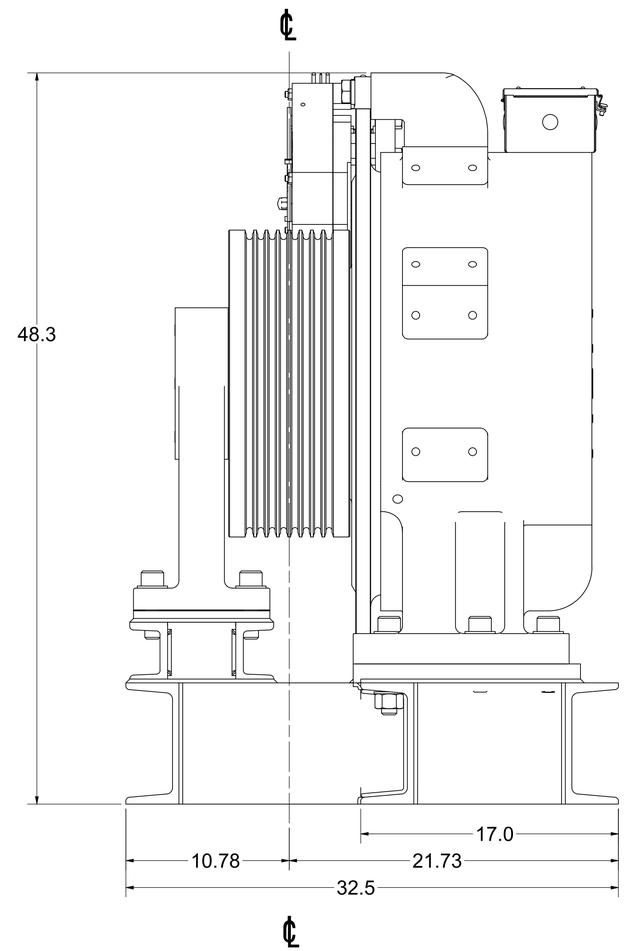

MACHINE W/20" TW
4375 LBS 50% CB MAX CAPACITY 1:1
WEIGHT: 3872 lbmass

SEE PAGE 1 FOR REVISIONS

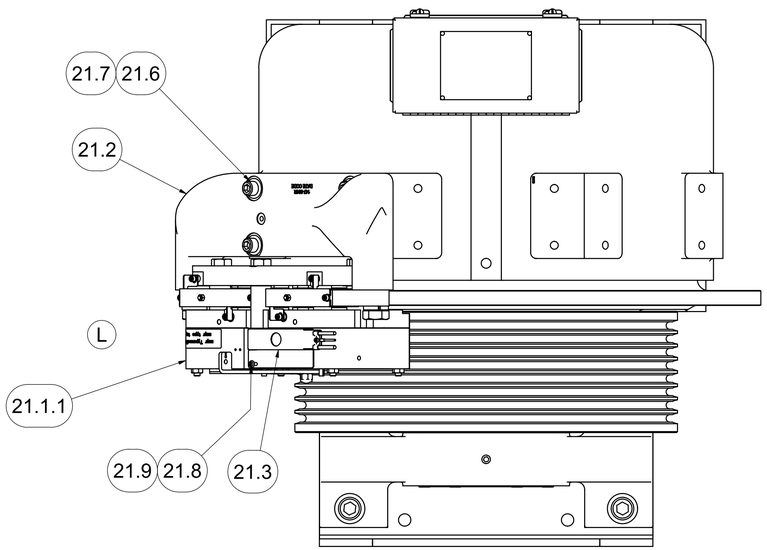

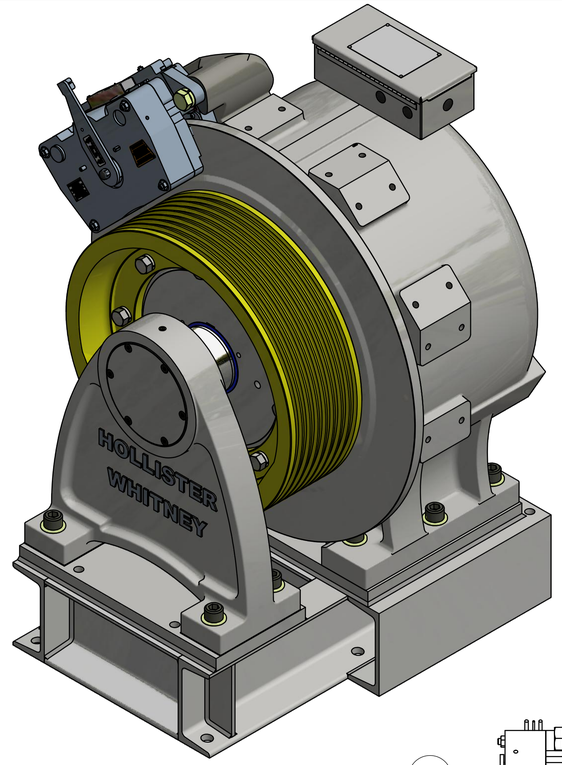

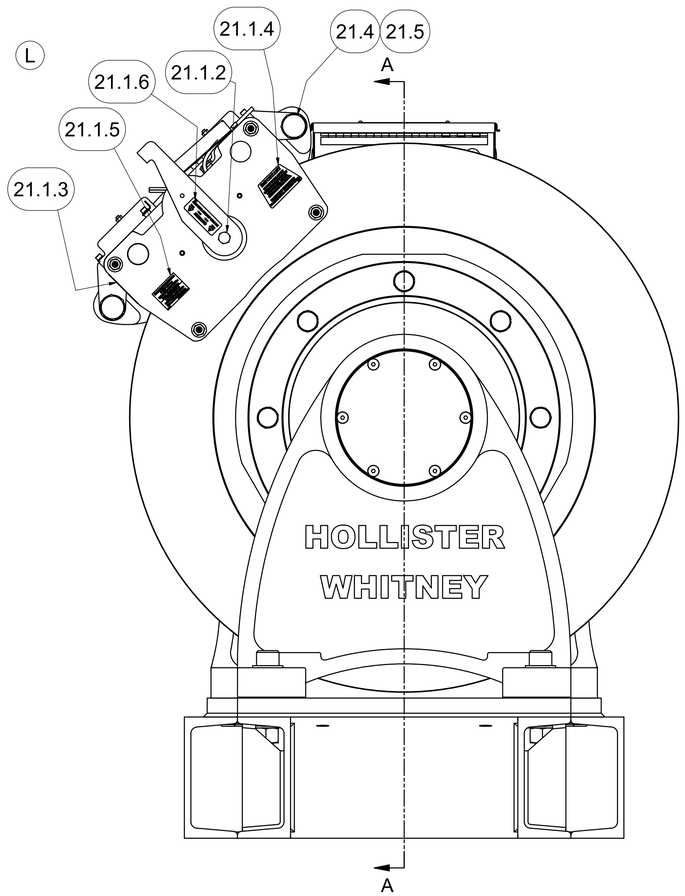

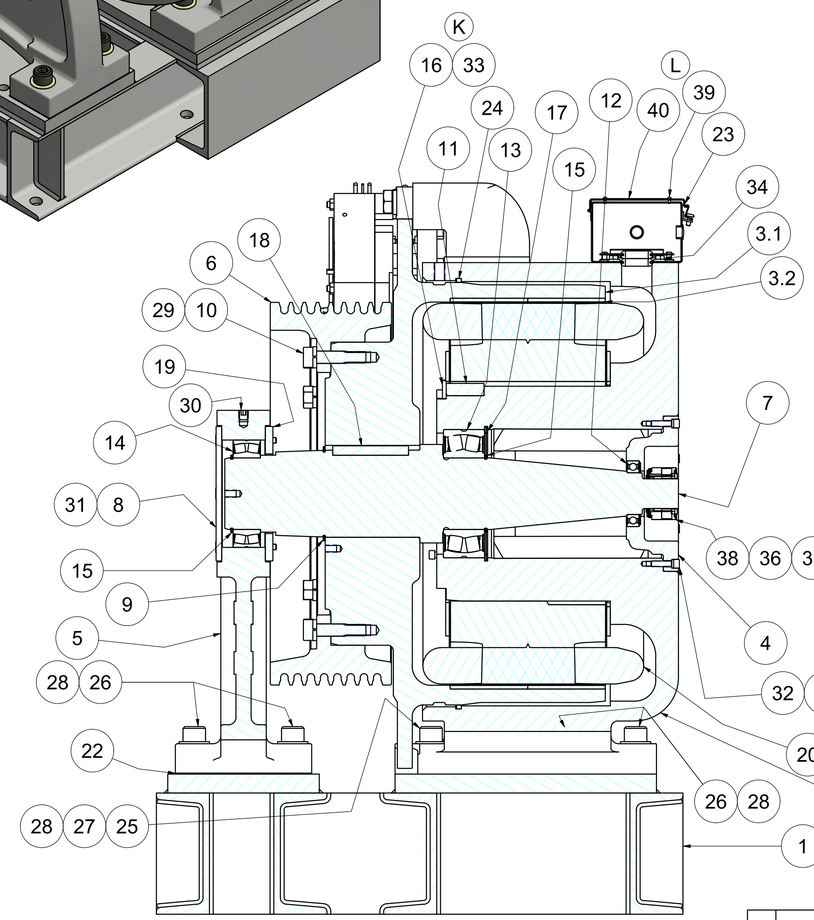

SECTION A-A

	ITEM	QTY	PART NUMBER	DESCRIPTION
	1	1	GL260B-01	FINISHING BASE, GL260
	2	1	GL260-001	BASE HOUSING, MOTOR #GL260
	3	1	GL260-002	ROTOR ASSEMBLY - MOTOR #GL260
	3.1	1	GL260-004	ROTOR
	3.2	80	GL260-099	PERMANENT MAGNET - #GL260 & GL130A MOTORS
	4	1	GL260-005	BEARING CAP
	5	1	GL185-006	OUTBOARD STAND, AC GEARLESS
	6	1	GL185-008	SHEAVE, 25"
	7	1	GL260-018	MAIN SHAFT
	8	1	GL185-019	END CAP
	9	1	GL185-020	RETAINING RING - ROTOR
	10	8	GL185-073	BODY BOLT
	11	1	GL100-088	KEY - STATOR CORE TO BASE
	12	1	GL185-089	BEARING, SEALED SINGLE ROW DEEP GROOVE BALL
	13	1	GL130-090	SEALED SPHERICAL ROLLER BEARING
	14	1	GL185-090	BEARING, SEALED SPHERICAL ROLLER
	15	2	GL130-092	RETAINING RING - SHAFT
	16	1	GL130-093	RETAINING RING - HOUSING
K	17	3	GL100-094-1	CLAMP - STATOR ASSEMBLY
	18	1	GL185-095	KEY - MAIN SHAFT TO ROTOR
	19	1	GL185-104	CAP
	20	1	GL260-100	WINDING ASSEMBLY - 40 POLE
	21	1	GL185-147	DISC BRAKE (MAYR 10.1) ASSEMBLY
	21.1	1	GL185-147-115S	MAYR #10.1 BRAKE WITH STANDARD STICKERS
L	21.1.1	1	GL185-147-115	MAYR #10.1 BRAKE - RSD10/894.510.53S #8252206
	21.1.2	1	142-050	BLACK VINYL CAP
	21.1.3	1	P-175	TAG, GEARLESS MACHINE BRAKE AIRGAP DATA
	21.1.4	1	P-190	ROTOR INSPECTION & BRAKE BURNISHING STICKER
	21.1.5	1	P-214	TAG, GL130A, GL185 & GL260 - BRAKE RATINGS
	21.1.6	1	P-229	CAUTION LABEL - DO NOT ADJUST THIS NUT
	21.2	1	147-001	BRAKE BASE
	21.3	1	147-003	COVER - MAYR #10.1 ELECTRICAL
	21.4	2	1 - 8 UNC x 3.5"	HEX HEAD CAP SCREW
	21.5	2	1" WASHER	STANDARD LOCK WASHER
	21.6	4	5/8 - 11 UNC x 2.5"	SOCKET HEAD CAP SCREW
	21.7	4	5/8 WASHER	STANDARD WASHER
	21.8	1	M4 x 0.7 x 8 mm	SHCS - METRIC
	21.9	1	#8 WASHER	STANDARD WASHER
	21.10	AS NEC	143-026	BRAKE HOUSING SHIM - 0.03" (NOT SHOWN)
			143-027	BRAKE HOUSING SHIM - 0.06" (NOT SHOWN)
	22	AS NEC	GL185-157-05	OUTBOARD STAND SHIM - 0.005"
			GL185-157-10	OUTBOARD STAND SHIM - 0.010"
			GL185-157-31	OUTBOARD STAND SHIM - 0.031"
	23	1	GL185-159	HOFFMAN ELECTRICAL ENCLOSURE, A12064CH MODIFIED
	24	1	GL100-165-1	FELT DUST SEAL
	25	2	1 - 8 UNC x 5.5"	SOCKET HEAD CAP SCREW
	26	8	1 - 8 UNC x 4"	SOCKET HEAD CAP SCREW
	27	2	1 - 8 UNC NUT	HEAVY HEX NUT
	28	12	1" WASHER	SAE WASHER
	29	8	13/16 WASHER	HEAVY LOCK WASHER
	30	1	5/8-11 UNC x 0.625	HALF DOG SET SCREW
	31	6	3/8-16 UNC x 4	FLAT HEAD CAP SCREWS
	32	6	3/8 - 16 UNC - 1 1/2	SOCKET HEAD CAP SCREW
K	33	3	3/8 - 16 UNC - 1 1/4	SOCKET HEAD CAP SCREW
K	34	4	3/8-16 UNC x 0.5	WHIZ BOLT
	35	6	3/8 Lock Washers	HI-COLLAR LOCK WASHER
	36	4	No. 8 - 32 UNC - 1/4	HEX HEAD CAP SCREW
	37	4	#8 LOCK WASHER	EXT. TOOTH LOCK WASHER
	38	1	ECN 113 52810061	50mm HEIDENHAIN ENCODER
L	39	4	#6 U x 0.3125	DRIVE SCREW
	40	1	P-173	MOTOR TAG - PMAC GEARLESS MACHINE

MACHINE #	WINDING P/N	COIL/WINDING EFFICIENCY (%)	FRAME/MAGNET SIZE (mm)	VOLTAGE (Vac)	MACHINE SPEED (RPM)	CAR SPEED (fpm)
GL260-35L	GL260-170-350	90	260	170	53.5	350
GL260-35H	GL260-360-350	90	260	360	53.5	350
GL260-50L	GL260-170-500	90	260	170	53.5	500
GL260-50H	GL260-360-500	90	260	360	53.5	500
GL260-70L	GL260-170-700	90	260	170	53.5	700

WEIGHT: 4754.4 lbmass

			K	3X GL100-094-1 WAS 1X GL185-094, 3X 3/8 x 1.25 SHCS WAS 6X, 6X 3/8 WASHER WAS 12X, PUR #1111	LTL 10/28/19
L	UPDATE BRAKE PARTS LIST & TAGS, PUR #1260	LTL 1/7/20			

THIS DRAWING IS SUPPLIED AS A REPRESENTATION OF THE EQUIPMENT HOLLISTER-WHITNEY ELEVATOR CO. LLC ("MANUFACTURER") HAS AGREED TO SUPPLY. SLIGHT ADJUSTMENTS MAY OCCUR DURING MANUFACTURING AND INSTALLATION. ANY MODIFICATIONS NOT APPROVED IN WRITING BY MANUFACTURER MAY AFFECT OPERATION, VOIDS ANY WARRANTY AND RELEASES MANUFACTURER OF ALL LIABILITY.
THIS DOCUMENT CONTAINS CONFIDENTIAL AND PROPRIETARY INFORMATION THAT CANNOT BE REPRODUCED OR DIVULGED, IN WHOLE OR IN PART, WITHOUT WRITTEN AUTHORIZATION FROM THE MANUFACTURER.

THIRD ANGLE PROJECTION

HOLLISTER-WHITNEY
ELEVATOR CO. LLC

TITLE: GEARLESS MACHINE

DRAWN BY: LTL | SCALE: 1 / 5 | MATERIAL: SEE MATERIAL LIST | REFERENCE TOL. ALL DIMENSIONS REFERENCE UNLESS OTHERWISE SPECIFIED

SHEET SIZE: D | DATE: 11/18/2011 | GL260 | SHEET 1 OF 2

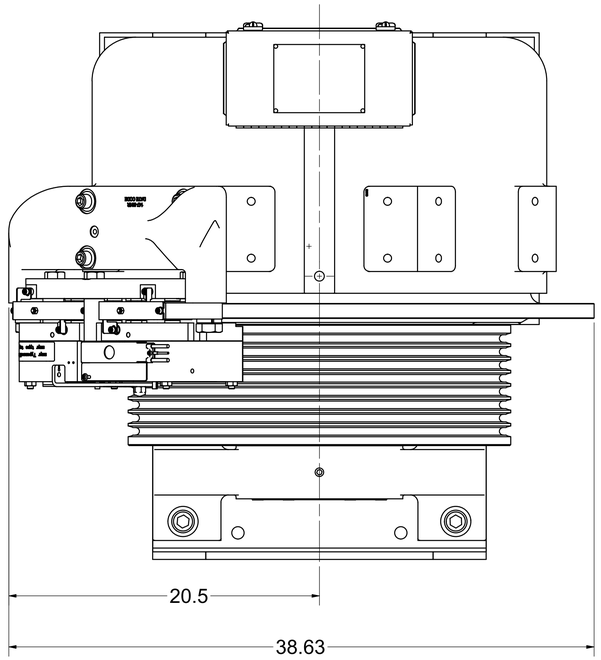

25" SHEAVE
4500# CAP. MAX @ 50%

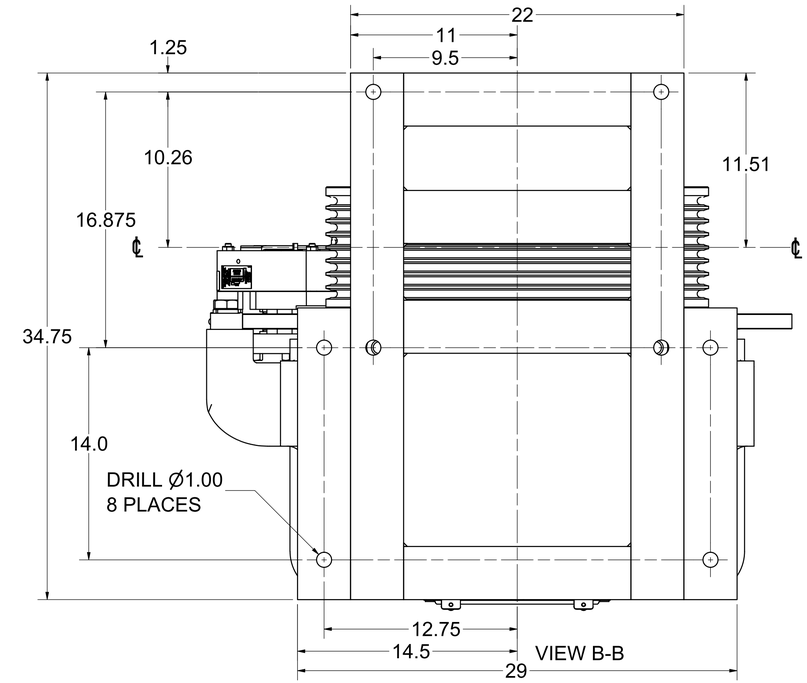

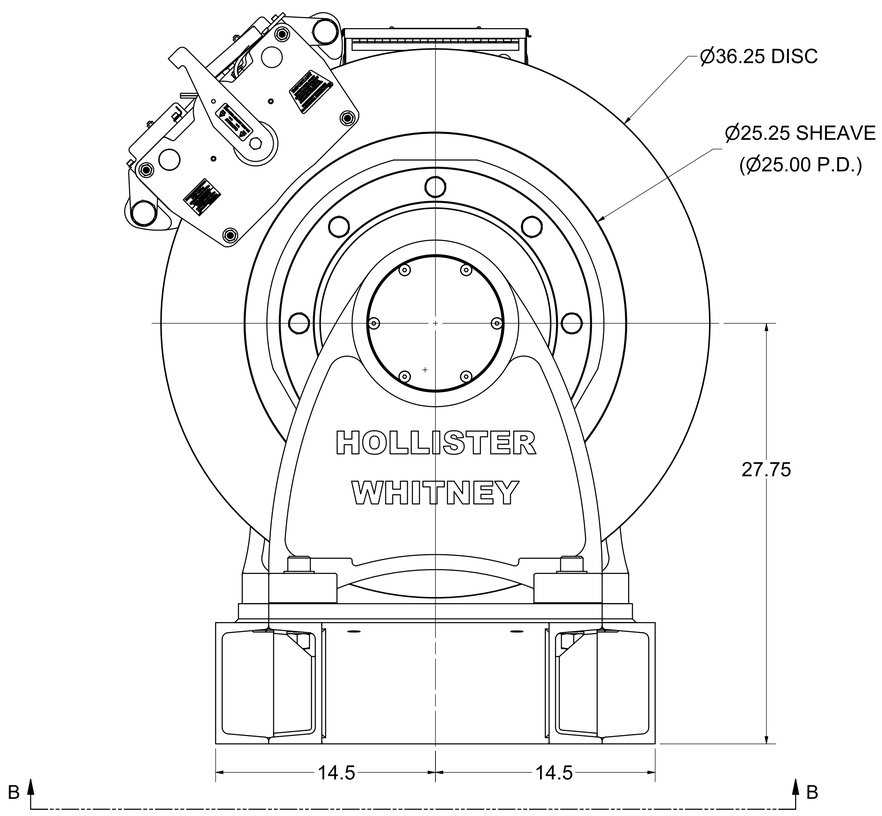

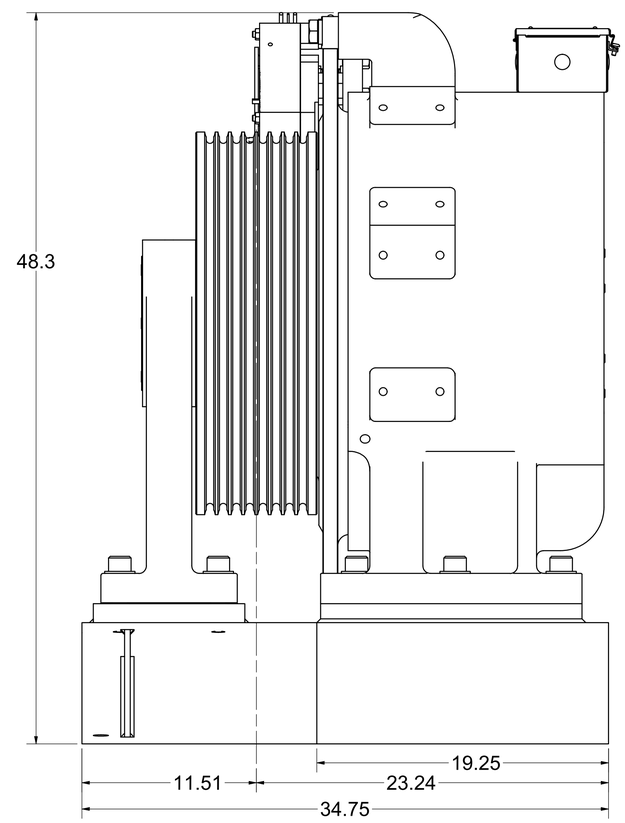

SEE OTHER SIDE FOR
REVISIONS

WEIGHT: 4754.4 lbmass

HOLLISTER-WHITNEY
ELEVATOR CO. LLC

TITLE: GEARLESS MACHINE

THIS DRAWING IS SUPPLIED AS A REPRESENTATION OF THE EQUIPMENT HOLLISTER-WHITNEY ELEVATOR CO. LLC ("MANUFACTURER") HAS AGREED TO SUPPLY. SLIGHT ADJUSTMENTS MAY OCCUR DURING MANUFACTURING AND INSTALLATION. ANY MODIFICATIONS NOT APPROVED IN WRITING BY MANUFACTURER MAY AFFECT OPERATION, VOIDS ANY WARRANTY AND RELEASES MANUFACTURER OF ALL LIABILITY.
THIS DOCUMENT CONTAINS CONFIDENTIAL AND PROPRIETARY INFORMATION THAT CANNOT BE REPRODUCED OR DIVULGED, IN WHOLE OR IN PART, WITHOUT WRITTEN AUTHORIZATION FROM THE MANUFACTURER.

THIRD ANGLE PROJECTION

DRAWN BY	SCALE	MATERIAL	REFERENCE TOL.
LTL	1 / 5	SEE MATERIAL LIST	ALL DIMENSIONS REFERENCE UNLESS OTHERWISE SPECIFIED
SHEET SIZE: D		DATE: 11/18/2011	GL260 SHEET 2 OF 2

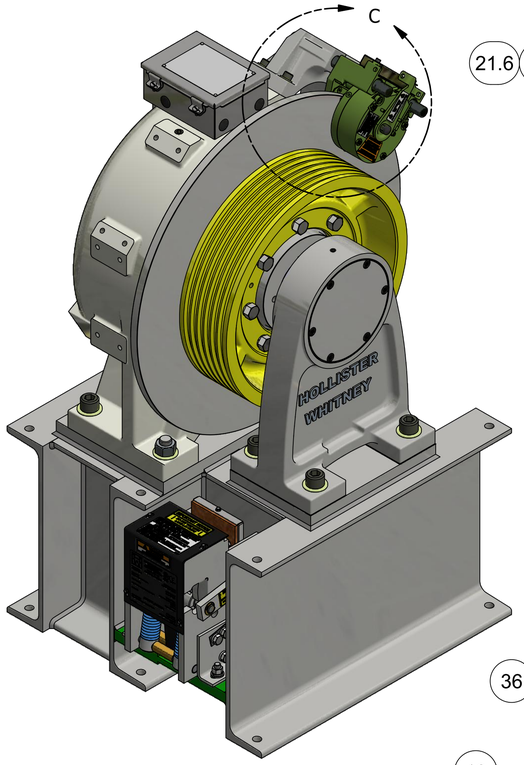

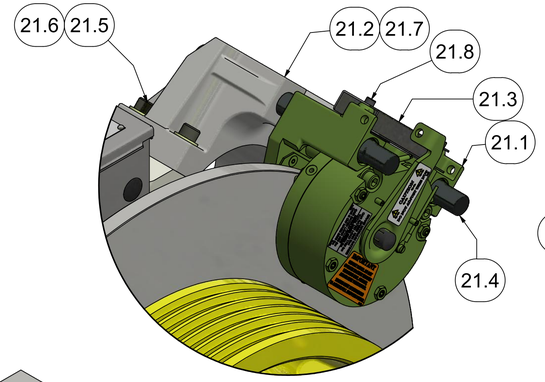

DETAIL C

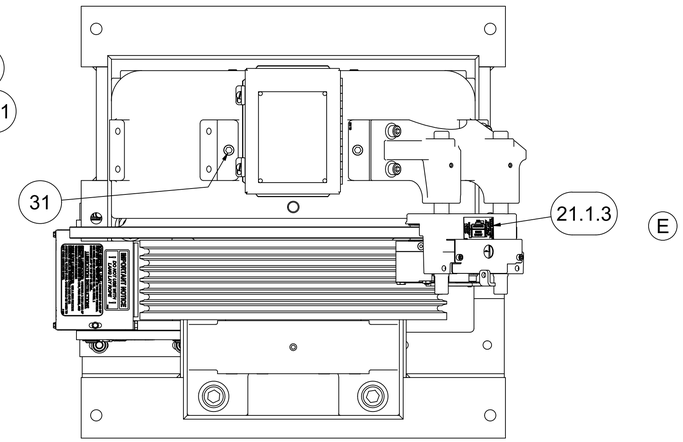

MACHINE REQUIRES ONE (1) PRIMARY SERVICE BRAKE AND ONE ROPE GRIPPER FOR EMERGENCY SERVICE. 620 ROPE GRIPPER (NOT INCLUDED) SHOWN ON LEFT SIDE. RIGHT SIDE SIMILAR.
BOLT-DOWN HARDWARE INCLUDED.

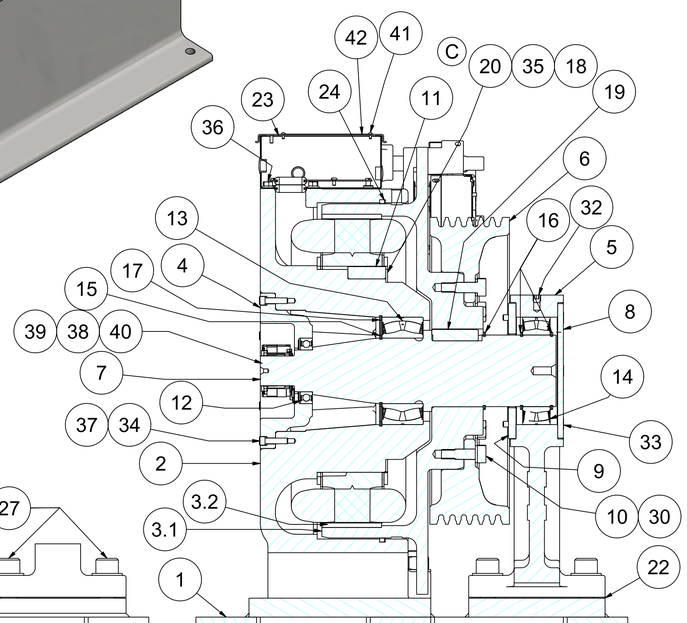

SECTION A-A

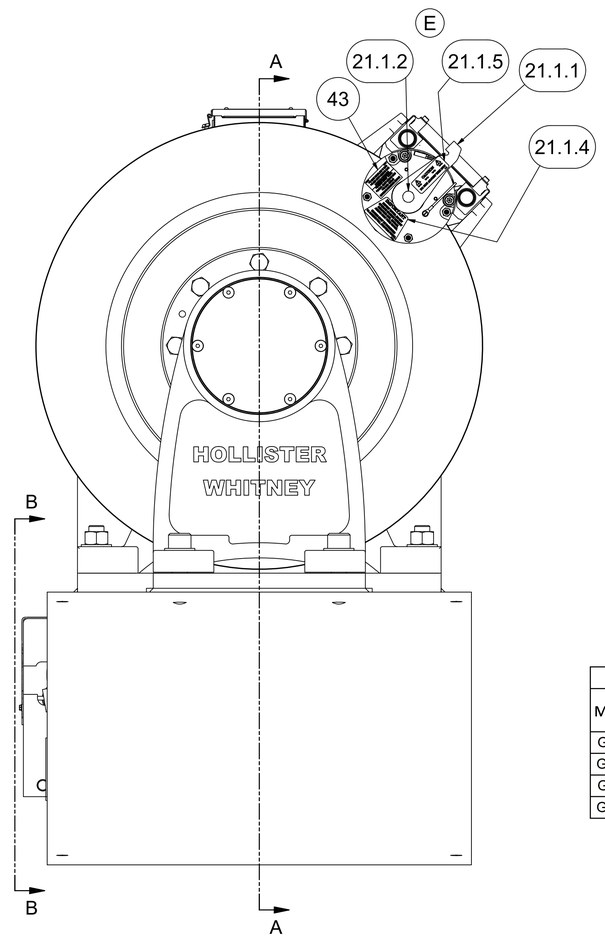

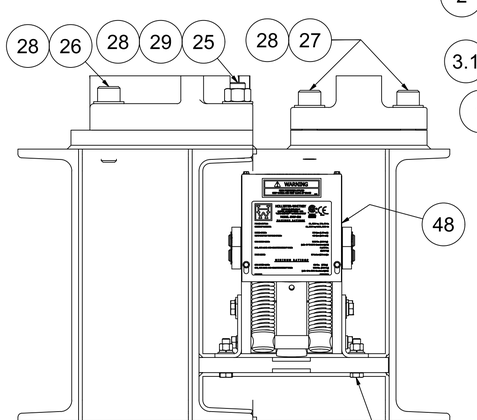

VIEW B-B

	ITEM	QTY	PART NUMBER	DESCRIPTION
	1	1	GL101B-620	BASE FABRICATION - FINISHED
	2	1	GL100-001	BASE HOUSING, MOTOR #GL100
	3	1	GL101-002	ROTOR ASSEMBLY, MOTOR #GL100
	3.1	1	GL101-004	ROTOR
	3.2	28	GL100-099	PERMANENT MAGNET - MOTOR #GL100
	4	1	GL260-005	BEARING CAP
	5	1	GL171-006	OUTBOARD STAND, AC GEARLESS
	6	1	GL100-010	20" SHEAVE, 6 x 1/2" ROPE MAX
	7	1	GL101-018	MAIN SHAFT
B	8	1	GL185-019	END CAP
	9	1	GL171-020	BEARING END CAP
	10	8	GL100-073	BODY BOLT
	11	1	GL100-088	KEY - STATOR CORE TO BASE
	12	1	GL185-089	BEARING, SEALED SINGLE ROW DEEP GROOVE BALL
	13	1	GL100-090	Bearings, Sealed Spherical Roller
	14	1	GL185-090	BEARING, SEALED SPHERICAL ROLLER
	15	1	GL100-092	RETAINING RING - SHAFT
	16	3	GL130-092	RETAINING RING - SHAFT
	17	1	GL100-093	RETAINING RING - HOUSING
C	18	3	GL100-094-1	CLAMP - STATOR ASSEMBLY
	19	1	GL100-095	KEY - ROTOR TO SHAFT
	20	1	GL100-100	WINDING ASSEMBLY
	21	1	GL100-146	DISC BRAKE (MAYR #6) - MRL
	21.1	1	GL100-146-115	MAYR #6 RSD6 894 510 03 #8275067 (104/52 VDC)
D	21.1.1	1	GL100-146-115	MAYR #6 RSD6/894.510.03S 52V #8275067
	21.1.2	1	142-050	BLACK VINYL CAP
E	21.1.3	1	P-175	TAG, GEARLESS MACHINE BRAKE AIRGAP DATA
	21.1.4	1	P-190	ROTOR INSPECTION & BRAKE BURNISHING STICKER
	21.1.5	1	P-229	CAUTION LABEL - DO NOT ADJUST THIS NUT
	21.2	1	142-001	BRAKE BASE
	21.3	1	146-003	COVER - MAYR #6 ELECTRICAL
	21.4	2	142-012	BRAKE ROD
	21.5	4	1/2-13 UNC x 2	SOCKET HEAD CAP SCREW
	21.6	4	1/2" WASHER	STANDARD WASHER
	21.7	2	3/8-16 UNC x 0.375	SET SCREW
	21.8	2	M6 x 1.00 x 8mm	SHCS - Metric
	22	As Nec.	GL171-157-05	OUTBOARD STAND SHIM - 0.005"
			GL171-157-10	OUTBOARD STAND SHIM - 0.010"
			GL171-157-31	OUTBOARD STAND SHIM - 0.031"
	23	1	GL100-159	ELECTRICAL ENCLOSURE, HOFFMAN A806CH - MODIFIED
	24	1	GL100-165	FELT DUST SEAL
	25	2	1 - 8 UNC x 5"	ALL THREAD - GRADE 5
	26	2	1 - 8 UNC x 4"	SOCKET HEAD CAP SCREW
	27	4	1 - 8 UNC x 3.25"	SOCKET HEAD CAP SCREW
	28	8	1" WASHER	SAE WASHER
	29	8	1" NUT	HEX NUT
	30	8	M18 LOCK WASHER	HELICAL SPRING LOCK WASHER - BODY BOLT
	31	6	3/4 - 10 UNC x 0.75"	SET SCREW (HOLE PLUG)
	32	6	1/2 - 13 UNC x 0.5"	SET SCREW (HOLE PLUG)
	33	6	3/8-16 UNC x 4	FLAT HEAD CAP SCREWS
	34	6	3/8 - 16 UNC x 1.5	SOCKET HEAD CAP SCREW
C	35	3	3/8 - 16 UNC x 1	SOCKET HEAD CAP SCREW
	36	4	3/8 - 16 UNC x 0.625"	WHIZ BOLT
C	37	6	0.375 WASHER	CAP SCREW LOCK WASHER
	38	4	#8-32 x 1/4"	SOCKET HEAD CAP SCREW
	39	4	#8 WASHER	INT. TOOTH LOCKWASHER
	40	1	ECN 113 52810061	50mm HEIDENHAIN ENCODER
E	41	4	#6 U x 0.3125	DRIVE SCREW
	42	1	P-173	MOTOR TAG - PMAC GEARLESS MACHINE
	43	1	P-210	TAG, GL101 - BRAKE RATINGS FOR MAYR #6
	44	4	1/2 - 13 UNC x 2.25"	HEX HEAD CAP SCREW
	45	4	1/2 - 13 UNC NUT	HEX NUT
	46	4	1/2 WASHER	LOCK WASHER
	47	4	1/2 WASHER	STANDARD WASHER
	48	1	620	NOT INCLUDED - SHOWN FOR CLARITY

1:1 APPLICATIONS USING 2:1 WINDINGS

MACHINE #	WINDING P/N	COIL/WINDING EFFICIENCY (%)	FRAME/MAGNET SIZE (mm)	VOLTAGE (Vac)	MACHINE SPEED (rpm)	CAR SPEED 20" (fpm)
GL101-15L	GL100-170-150	87.2	100	170	76.4	400
GL101-15H	GL100-360-150	87.1	100	360	76.4	400
GL101-20L	GL100-170-200	89.2	100	170	101.9	533
GL101-20H	GL100-360-200	89.3	100	360	101.9	533

WEIGHT: 2188.5 lbmass

E	UPDATE BRAKE PARTS LIST & TAGS, PUR #1260	LTL 12/19/19	C	WAS 6X, REMOVE 6X 3/8 WASHERS, PUR #1111	LTL 6/5/19
D	MAYR #8275067 WAS #8211863, PUR #1244	LTL 12/9/19	B	GL185-019 WAS GL171-019, PUR #788	LTL 6/23/16
C	3X GL100-094-1 WAS 1X GL100-094, 3X 3/8x1HHCS	LTL 6/5/19	A	PRODUCTION RELEASE, PUR #640	LTL 5/23/14

THIS DRAWING IS SUPPLIED AS A REPRESENTATION OF THE EQUIPMENT HOLLISTER-WHITNEY ELEVATOR CO. LLC ("MANUFACTURER") HAS AGREED TO SUPPLY. SLIGHT ADJUSTMENTS MAY OCCUR DURING MANUFACTURING AND INSTALLATION. ANY MODIFICATIONS NOT APPROVED IN WRITING BY MANUFACTURER MAY AFFECT OPERATION, VOIDS ANY WARRANTY AND RELEASES MANUFACTURER OF ALL LIABILITY.
THIS DOCUMENT CONTAINS CONFIDENTIAL AND PROPRIETARY INFORMATION THAT CANNOT BE REPRODUCED OR DIVULGED, IN WHOLE OR IN PART, WITHOUT WRITTEN AUTHORIZATION FROM THE MANUFACTURER.

THIRD ANGLE PROJECTION

HOLLISTER-WHITNEY
ELEVATOR CO. LLC

TITLE: GEARLESS MACHINE, 1100# @ 50% CB, 1000# @ 45% CB, 900# @ 40% CB

DRAWN BY	SCALE	MATERIAL	REFERENCE TOL.
LTL	1 / 5	SEE PARTS LSIT	ALL DIMENSIONS REFERENCE UNLESS OTHERWISE SPECIFIED

SHEET SIZE	DATE	
D	5/22/2014	GL101-620 SHEET 1 OF 2

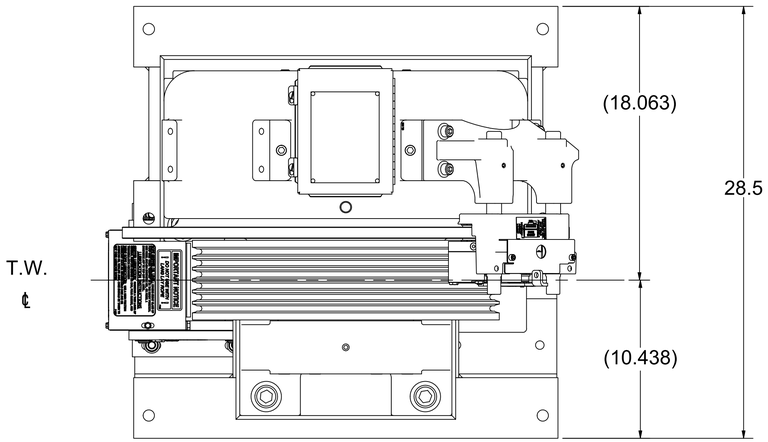

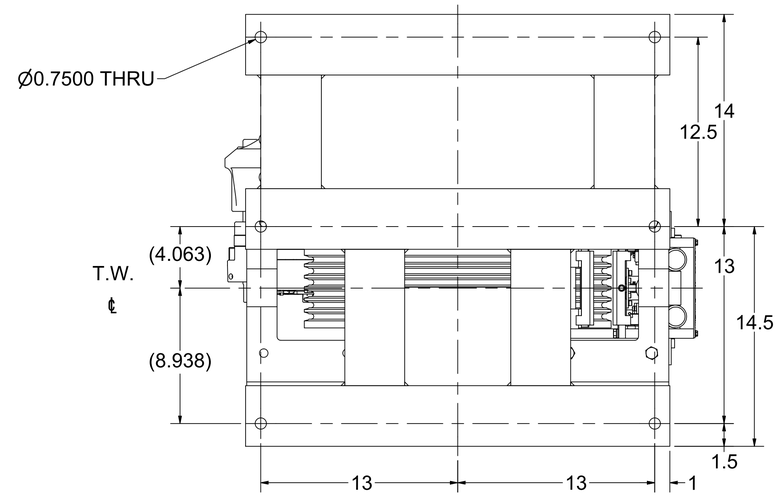

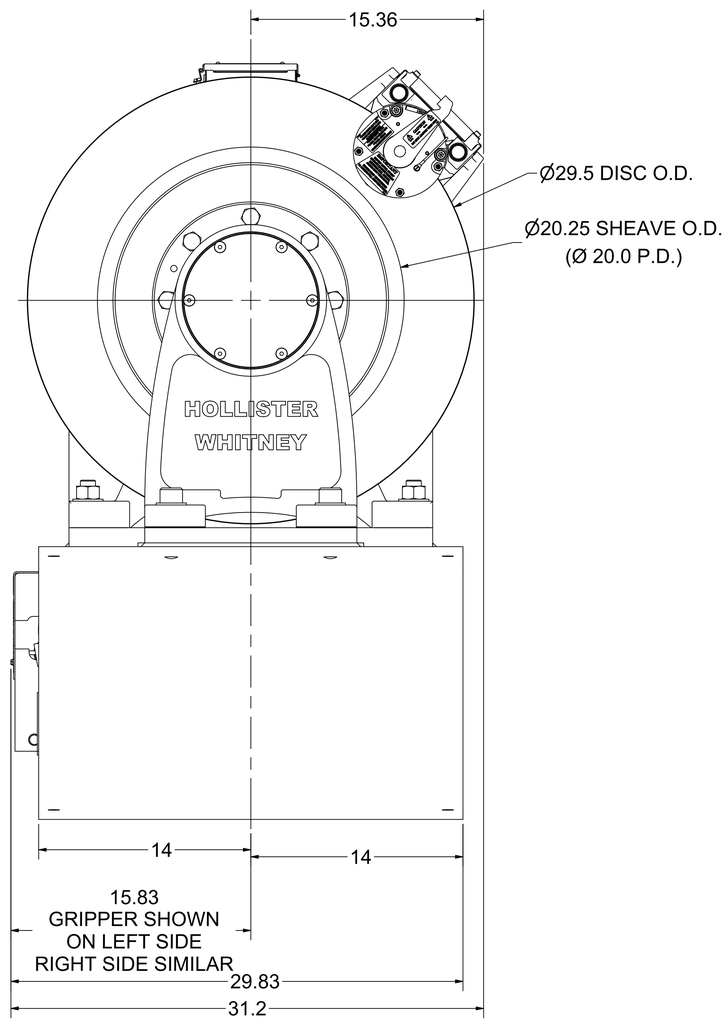

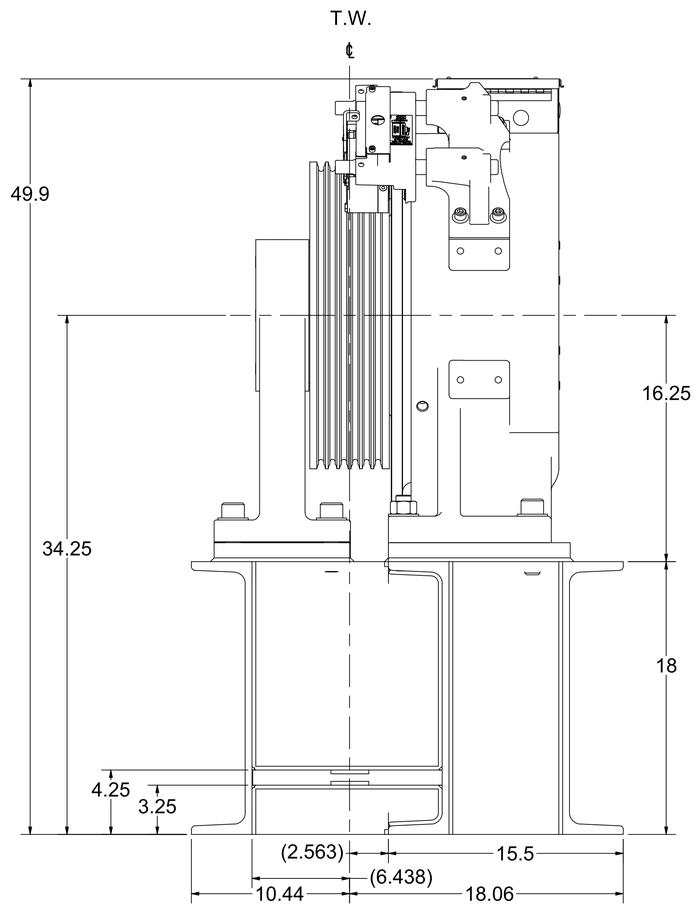

WEIGHT: 2188.5 lbmass

				SEE OTHER SIDE FOR REVISIONS	HOLLISTER-WHITNEY ELEVATOR CO. LLC
					TITLE: GEARLESS MACHINE, 1100# @ 50% CB, 1000# @ 45% CB, 900# @ 40% CB
				THIRD ANGLE PROJECTION	DRAWN BY: LTL; SCALE: 1 / 5; MATERIAL: SEE PARTS LSIT; REFERENCE TOL.: ALL DIMENSIONS REFERENCE UNLESS OTHERWISE SPECIFIED
					SHEET SIZE: D; DATE: 5/22/2014; GL101-620; SHEET 2 OF 2

THIS DRAWING IS SUPPLIED AS A REPRESENTATION OF THE EQUIPMENT HOLLISTER-WHITNEY ELEVATOR CO. LLC ("MANUFACTURER") HAS AGREED TO SUPPLY. SLIGHT ADJUSTMENTS MAY OCCUR DURING MANUFACTURING AND INSTALLATION. ANY MODIFICATIONS NOT APPROVED IN WRITING BY MANUFACTURER MAY AFFECT OPERATION, VOIDS ANY WARRANTY AND RELEASES MANUFACTURER OF ALL LIABILITY.
THIS DOCUMENT CONTAINS CONFIDENTIAL AND PROPRIETARY INFORMATION THAT CANNOT BE REPRODUCED OR DIVULGED, IN WHOLE OR IN PART, WITHOUT WRITTEN AUTHORIZATION FROM THE MANUFACTURER.

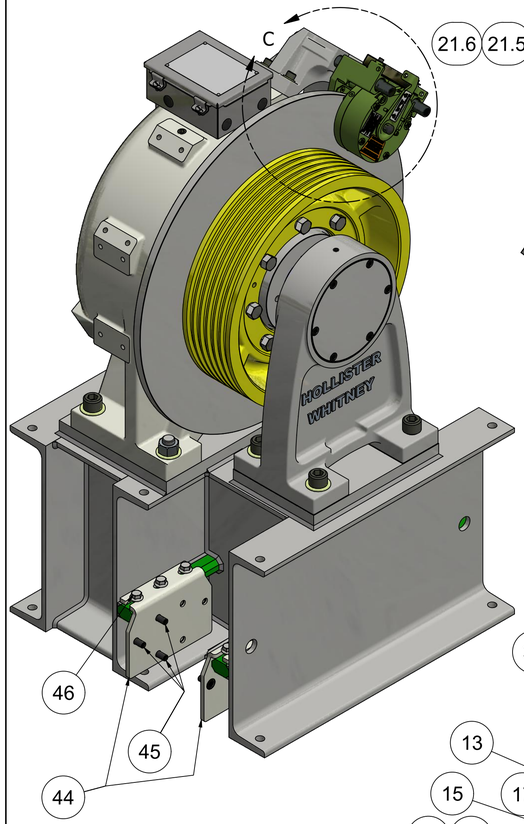

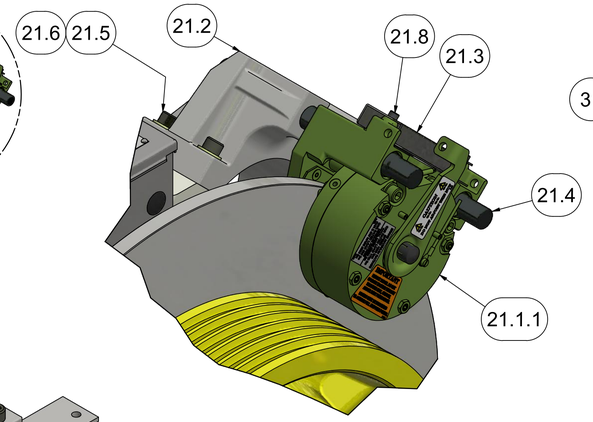

DETAIL C

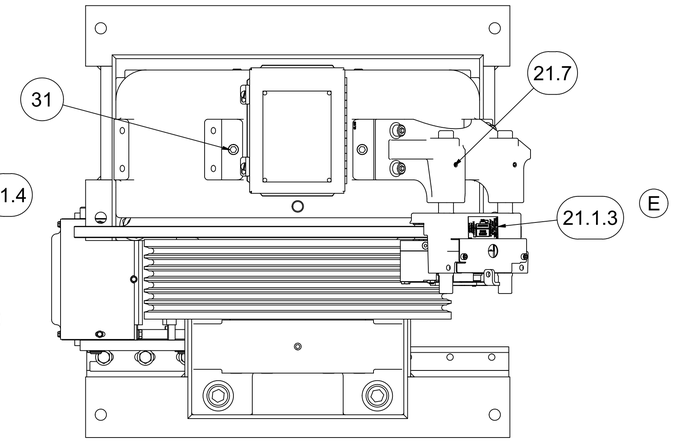

MACHINE REQUIRES ONE (1) PRIMARY SERVICE BRAKE AND ONE ROPE GRIPPER FOR EMERGENCY SERVICE. 622 ROPE GRIPPER SHOWN ON LEFT SIDE, RIGHT SIDE SIMILAR.

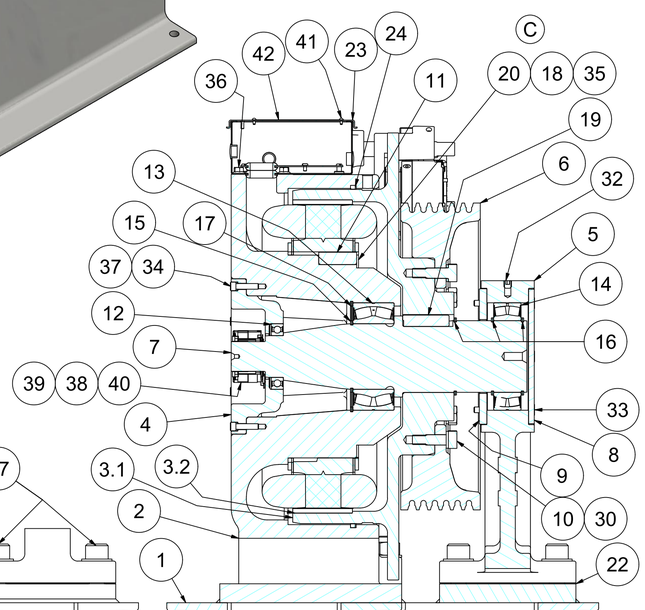

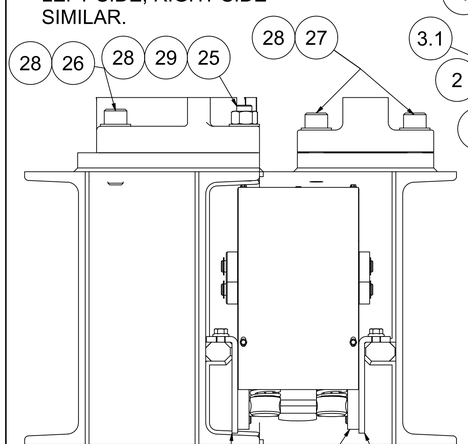

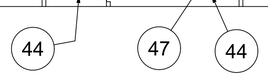

VIEW B-B

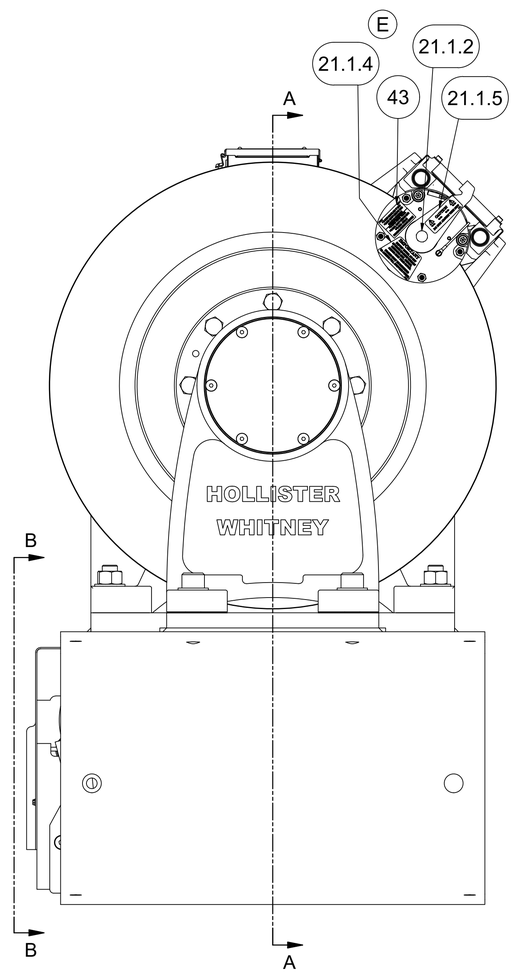

SECTION A-A

	ITEM	QTY	PART NUMBER	DESCRIPTION
	1	1	GL101B-622	BASE FABRICATION - FINISHED
	2	1	GL100-001	BASE HOUSING, MOTOR #GL100
	3	1	GL101-002	ROTOR ASSEMBLY, MOTOR #GL100
	3.1	1	GL101-004	ROTOR
	3.2	28	GL100-099	PERMANENT MAGNET - MOTOR #GL100
	4	1	GL260-005	BEARING CAP
	5	1	GL171-006	OUTBOARD STAND, AC GEARLESS
	6	1	GL100-010	20" SHEAVE, 6 x 1/2" ROPE MAX
	7	1	GL101-018	MAIN SHAFT
B	8	1	GL185-019	END CAP
	9	1	GL171-020	BEARING END CAP
	10	8	GL100-073	BODY BOLT
	11	1	GL100-088	KEY - STATOR CORE TO BASE
	12	1	GL185-089	BEARING, SEALED SINGLE ROW DEEP GROOVE BALL
	13	1	GL100-090	Bearings, Sealed Spherical Roller
	14	1	GL185-090	BEARING, SEALED SPHERICAL ROLLER
	15	1	GL100-092	RETAINING RING - SHAFT
	16	3	GL130-092	RETAINING RING - SHAFT
	17	1	GL100-093	RETAINING RING - HOUSING
C	18	3	GL100-094-1	CLAMP - STATOR ASSEMBLY
	19	1	GL100-095	KEY - ROTOR TO SHAFT
	20	1	GL100-100	WINDING ASSEMBLY
	21	1	GL100-146	DISC BRAKE (MAYR #6) - MRL
	21.1	1	GL100-146-115S	MAYR #6 BRAKE WITH STANDARD STICKERS
D	21.1.1	1	GL100-146-115	MAYR #6 RSD6/894.510.03S 52V #8275067
E	21.1.2	1	142-050	BLACK VINYL CAP
E	21.1.3	1	P-175	TAG, GEARLESS MACHINE BRAKE AIRGAP DATA
	21.1.4	1	P-190	ROTOR INSPECTION & BRAKE BURNISHING STICKER
	21.1.5	1	P-229	CAUTION LABEL - DO NOT ADJUST THIS NUT
	21.2	1	142-001	BRAKE BASE
	21.3	1	146-003	COVER - MAYR #6 ELECTRICAL
	21.4	2	142-012	BRAKE ROD
	21.5	4	1/2-13 UNC x 2	SOCKET HEAD CAP SCREW
	21.6	4	1/2" WASHER	STANDARD WASHER
	21.7	2	3/8-16 UNC x 0.375	SET SCREW
	21.8	2	M6 x 1.00 x 8mm	SHCS - Metric
	22	As Nec.	GL171-157-05	OUTBOARD STAND SHIM - 0.005"
			GL171-157-10	OUTBOARD STAND SHIM - 0.010"
			GL171-157-31	OUTBOARD STAND SHIM - 0.031"
	23	1	GL100-159	ELECTRICAL ENCLOSURE, HOFFMAN A806CH - MODIFIED
	24	1	GL100-165	FELT DUST SEAL
	25	2	1 - 8 UNC x 5"	SOCKET HEAD CAP SCREW
	26	2	1 - 8 UNC x 4"	SOCKET HEAD CAP SCREW
	27	4	1 - 8 UNC x 3.25"	SOCKET HEAD CAP SCREW
	28	8	1" WASHER	SAE WASHER
	29	8	1" NUT	HEX NUT
	30	8	Washer GB 859-87 18	Single coil spring lock washers, Light type
	31	6	3/4 - 10 UNC x 0.75"	SET SCREW (HOLE PLUG)
	32	6	1/2 - 13 UNC x 0.5"	SET SCREW (HOLE PLUG)
	33	6	3/8-16 UNC x 4	FLAT HEAD CAP SCREWS
	34	6	3/8 - 16 UNC x 1.5	SOCKET HEAD CAP SCREW
C	35	3	3/8 - 16 UNC x 1	SOCKET HEAD CAP SCREW
	36	4	3/8 - 16 UNC x 0.625"	WHIZ BOLT
C	37	6	0.375 WASHER	CAP SCREW LOCK WASHER
	38	4	#8-32 x 1/4"	SOCKET HEAD CAP SCREW
	39	4	#8 WASHER	INT. TOOTH LOCKWASHER
	40	1	ECN 113 52810061	50mm HEIDENHAIN ENCODER
	41	4	#6 U x 0.3125	DRIVE SCREW
E	42	1	P-173	MOTOR TAG - PMAC GEARLESS MACHINE
	43	1	P-210	TAG, GL101 - BRAKE RATINGS FOR MAYR #6
	44	2	622-041-GL	MOUNTING ANGLE, GL101-622 BASE
	45	6	1/2 - 13 UNC x 1.25"	FLAT HEAD CAP SCREW
	46	6	1/2 - 13 UNC x 1.25"	HEX FLANGE HEAD SREW
	47	1	622	NOT INCLUDED, SHOWN FOR CLARITY ONLY

1:1 APPLICATIONS USING 2:1 WINDINGS

MACHINE #	WINDING P/N	COIL/WINDING EFFICIENCY (%)	FRAME/MAGNET SIZE (mm)	VOLTAGE (Vac)	MACHINE SPEED (rpm)	CAR SPEED 20" (fpm)
GL101-15L	GL100-170-150	87.2	100	170	76.4	400
GL101-15H	GL100-360-150	87.1	100	360	76.4	400
GL101-20L	GL100-170-200	89.2	100	170	101.9	533
GL101-20H	GL100-360-200	89.3	100	360	101.9	533

WEIGHT: 2179.5 lbmass

E	UPDATE BRAKE PARTS LIST & TAGS, PUR #1260	LTL 12/19/19	C	WAS 6X, REMOVE 6X 3/8 WASHERS, PUR #1111	LTL 6/5/19
D	MAYR #8275067 WAS #8211863, PUR #1244	LTL 12/9/19	B	GL185-019 WAS GL171-019, PUR #788	LTL 6/23/16
C	3X GL100-094-1 WAS 1X GL100-094, 3X 3/8x1HHCS	LTL 6/5/19	A	PRODUCTION RELEASE, PUR #640	LTL 5/23/14

THIS DRAWING IS SUPPLIED AS A REPRESENTATION OF THE EQUIPMENT HOLLISTER-WHITNEY ELEVATOR CO. LLC ("MANUFACTURER") HAS AGREED TO SUPPLY. SLIGHT ADJUSTMENTS MAY OCCUR DURING MANUFACTURING AND INSTALLATION. ANY MODIFICATIONS NOT APPROVED IN WRITING BY MANUFACTURER MAY AFFECT OPERATION, VOIDS ANY WARRANTY AND RELEASES MANUFACTURER OF ALL LIABILITY.
THIS DOCUMENT CONTAINS CONFIDENTIAL AND PROPRIETARY INFORMATION THAT CANNOT BE REPRODUCED OR DIVULGED, IN WHOLE OR IN PART, WITHOUT WRITTEN AUTHORIZATION FROM THE MANUFACTURER.

THIRD ANGLE PROJECTION

HOLLISTER-WHITNEY
ELEVATOR CO. LLC

TITLE: GEARLESS MACHINE, 1100# @ 50% CB, 1000# @ 45% CB, 900# @ 40% CB

DRAWN BY	SCALE	MATERIAL	REFERENCE TOL.
LTL	1 / 5	SEE PARTS LIST	ALL DIMENSIONS REFERENCE UNLESS OTHERWISE SPECIFIED

SHEET SIZE	DATE	
D	5/21/2014	GL101-622 SHEET 1 OF 2

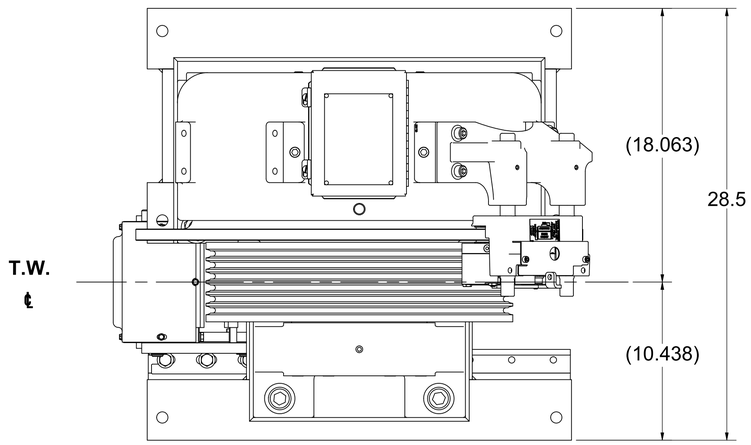

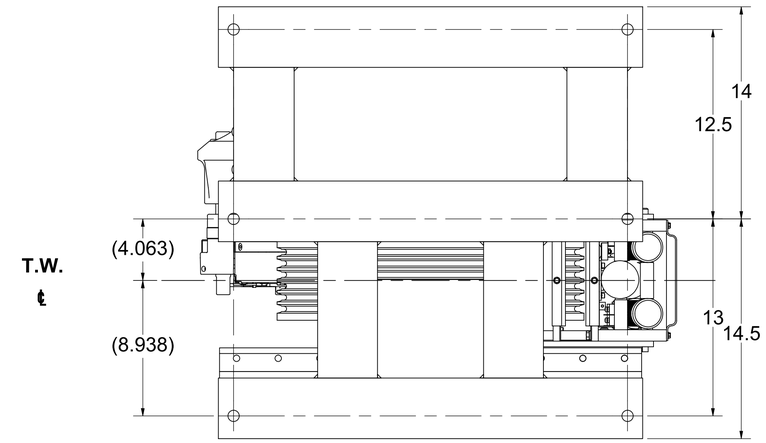

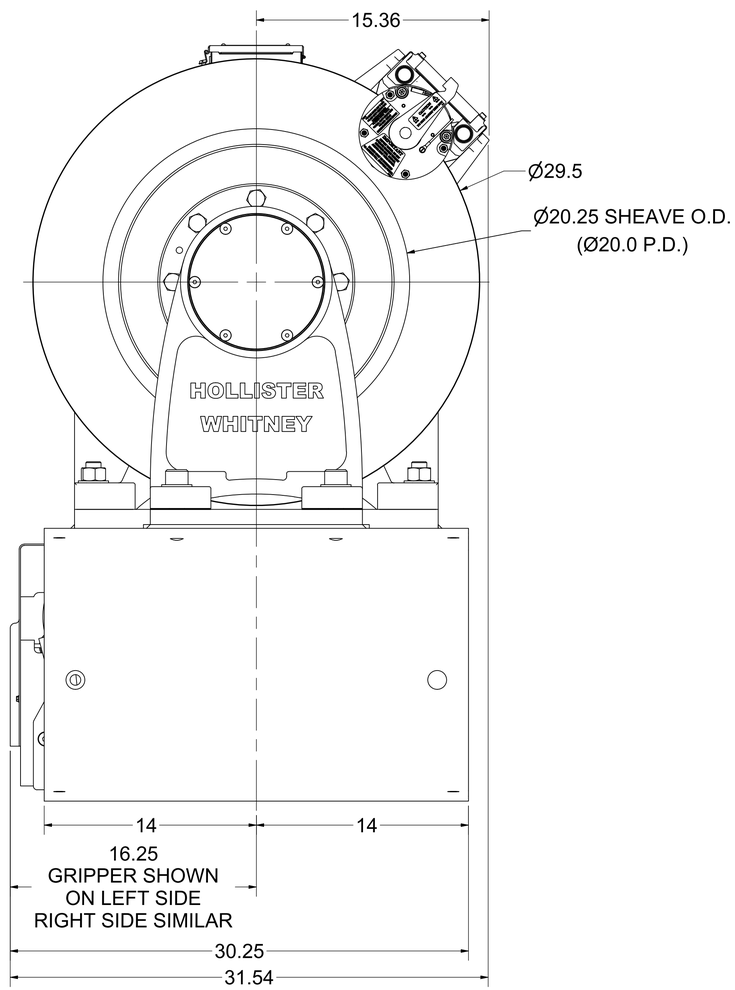

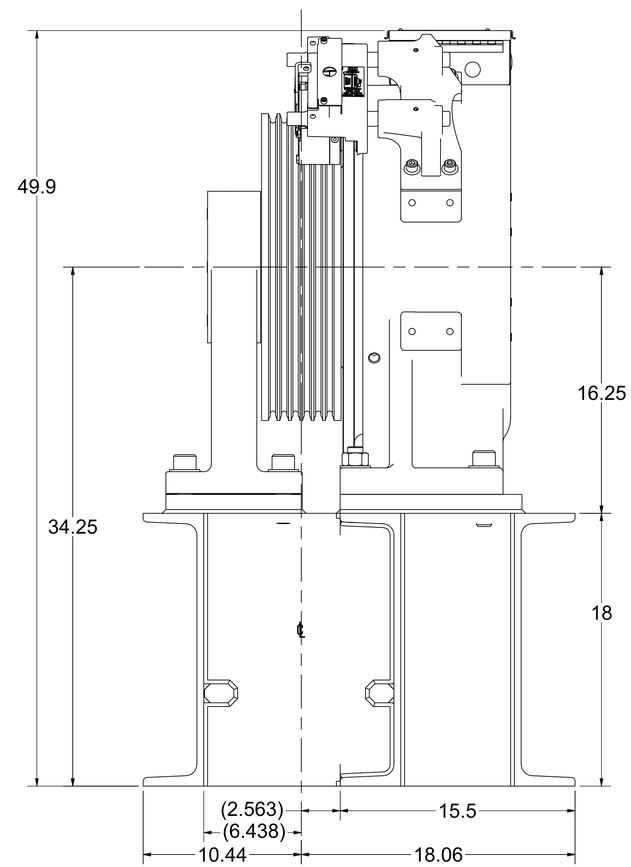

SEE OTHER SIDE FOR REVISIONS

WEIGHT: 2179.5 lbmass

HOLLISTER-WHITNEY
ELEVATOR CO. LLC

TITLE: GEARLESS MACHINE, 1100# @ 50% CB, 1000# @ 45% CB, 900# @ 40% CB

THIS DRAWING IS SUPPLIED AS A REPRESENTATION OF THE EQUIPMENT HOLLISTER-WHITNEY ELEVATOR CO. LLC ("MANUFACTURER") HAS AGREED TO SUPPLY. SLIGHT ADJUSTMENTS MAY OCCUR DURING MANUFACTURING AND INSTALLATION. ANY MODIFICATIONS NOT APPROVED IN WRITING BY MANUFACTURER MAY AFFECT OPERATION, VOIDS ANY WARRANTY AND RELEASES MANUFACTURER OF ALL LIABILITY.
THIS DOCUMENT CONTAINS CONFIDENTIAL AND PROPRIETARY INFORMATION THAT CANNOT BE REPRODUCED OR DIVULGED, IN WHOLE OR IN PART, WITHOUT WRITTEN AUTHORIZATION FROM THE MANUFACTURER.

THIRD ANGLE PROJECTION

DRAWN BY	SCALE	MATERIAL	REFERENCE TOL.
LTL	1 / 5	SEE PARTS LIST	ALL DIMENSIONS REFERENCE UNLESS OTHERWISE SPECIFIED
SHEET SIZE: D		DATE: 5/21/2014	GL101-622 SHEET 2 OF 2

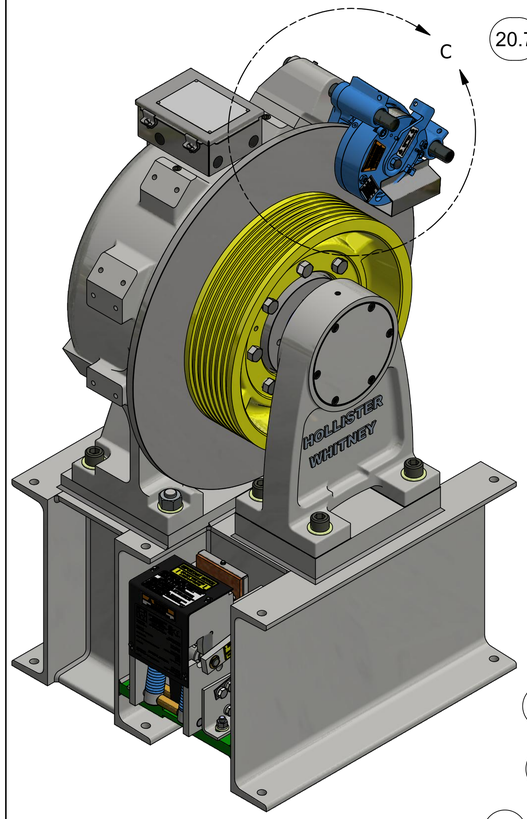

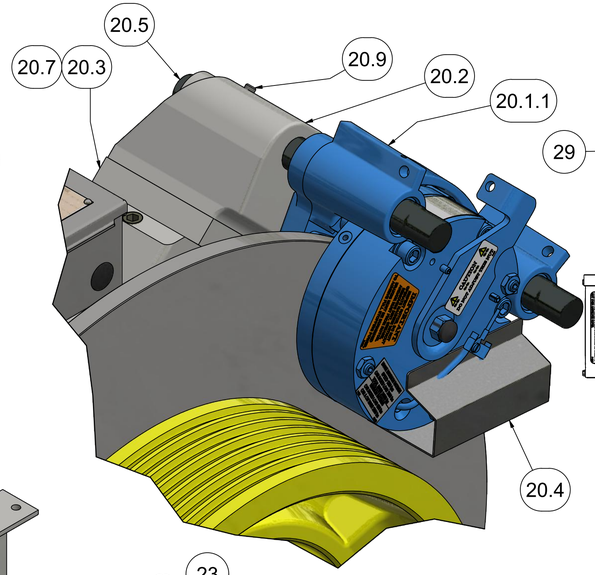

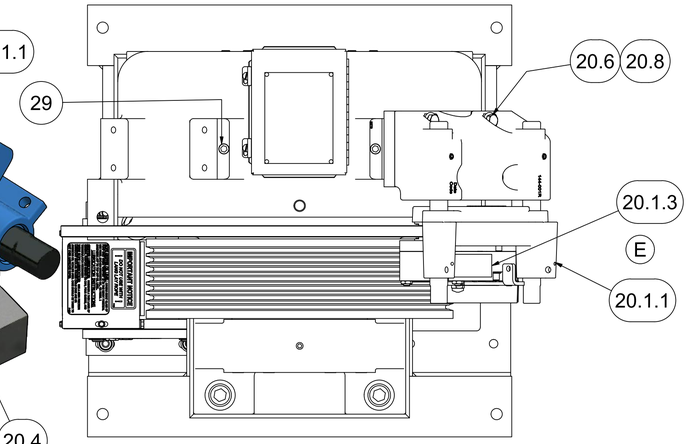

1:1 APPLICATIONS USING 2:1 WINDINGS						
MACHINE #	WINDING P/N	COIL/WINDING EFFICIENCY (%)	FRAME/MAGNET SIZE (mm)	VOLTAGE (Vac)	MACHINE SPEED (rpm)	CAR SPEED 20" (fpm)
GL131-20L	GL130-170-200	90.6	130	170	101.9	533
GL131-20H	GL130-360-200	90.7	130	360	101.9	533
GL131-35L	GL130-170-350	93.1	130	170	178.3	933
GL131-35H	GL130-360-350	93	130	360	178.3	933

MACHINE REQUIRES ONE (1) PRIMARY SERVICE BRAKE AND ONE ROPE GRIPPER FOR EMERGENCY SERVICE. 620 ROPE GRIPPER (NOT INCLUDED) SHOWN ON LEFT SIDE, RIGHT SIDE SIMILAR. ROPE GRIPPER BOLT-DOWN HARDWARE INCLUDED.

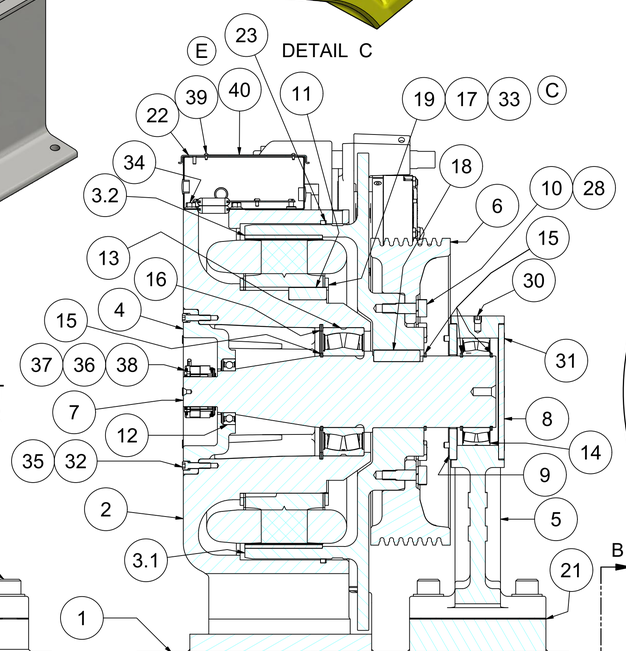

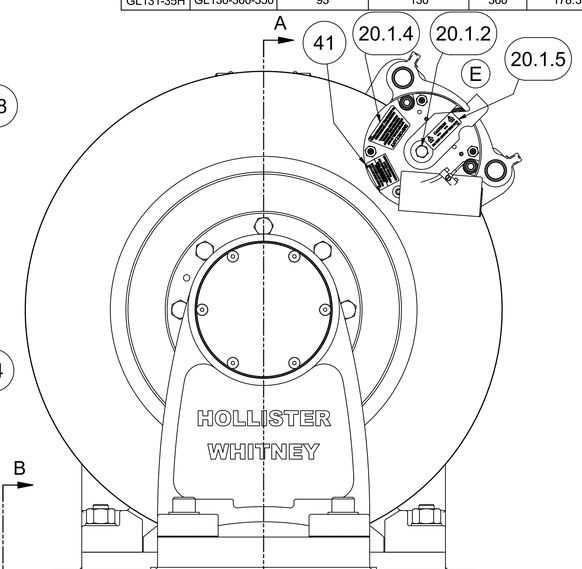

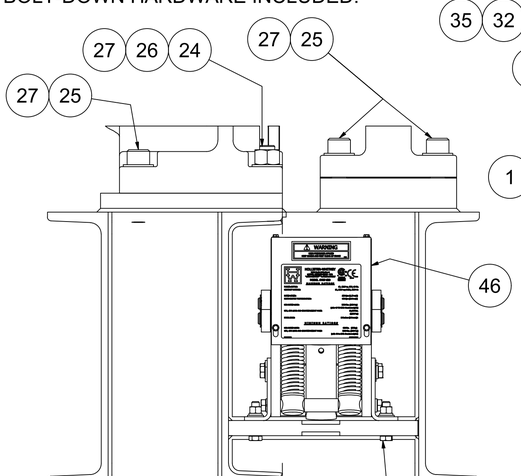

VIEW B-B

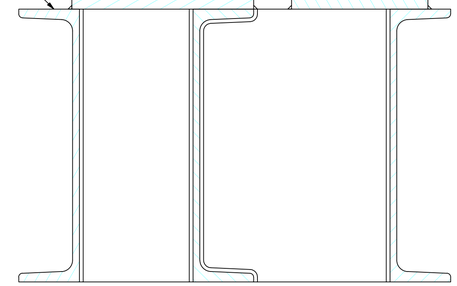

SECTION A-A

42 43 44 45

	ITEM	QTY	PART NUMBER	DESCRIPTION
	1	1	GL171B-620	BASE FABRICATION - FINISHED
	2	1	GL130-001	BASE HOUSING, MOTOR #GL130
	3	1	GL131-002	ROTOR ASSEMBLY, MOTOR #GL131
	3.1	1	GL131-004	ROTOR
	3.2	28	GL130-099	PERMANENT MAGNET - MOTOR #GL130
	4	1	GL130A-005	BEARING CAP
	5	1	GL171-006	OUTBOARD STAND, AC GEARLESS
	6	1	GL100-010	20" TRACTION SHEAVE (WIDE)
	7	1	GL131-018	MAIN SHAFT
B	8	1	GL185-019	END CAP
	9	1	GL171-020	BEARING END CAP
	10	8	GL100-073	BODY BOLT
	11	1	GL100-088	KEY - STATOR CORE TO BASE
	12	1	GL185-089	BEARING, SEALED SINGLE ROW DEEP GROOVE BALL
	13	1	GL130-090	SEALED SPHERICAL ROLLER BEARING
	14	1	GL185-090	BEARING, SEALED SPHERICAL ROLLER
	15	4	GL130-092	RETAINING RING - SHAFT
	16	1	GL130-093	RETAINING RING - HOUSING
C	17	3	GL100-094-1	CLAMP RING - STATOR ASSEMBLY
	18	1	GL100-095	KEY - ROTOR TO SHAFT
	19	1	GL130-100	WINDING ASSEMBLY - 28 POLE
	20	1	GL130-144	DISC BRAKE (MAYR #8) - MRL
	20.1	1	GL130-144-115S	MAYR #8 BRAKE WITH STANDARD STICKERS
D	20.1.1	1	GL130-144-115	MAYR #8; RSD8/894.510.03S 52V #8275066
	20.1.2	1	142-050	BLACK VINYL CAP
E	20.1.3	1	P-175	TAG, GEARLESS MACHINE BRAKE AIRGAP DATA
	20.1.4	1	P-190	ROTOR INSPECTION & BRAKE BURNISHING STICKER
	20.1.5	1	P-229	CAUTION LABEL - DO NOT ADJUST THIS NUT
	20.2	1	144-001	BRAKE BASE
	20.3	1	144-002	ADAPTOR PLATE - BRAKE BASE
	20.4	1	144-003	COVER - MAYR #8 ELECTRICAL
	20.5	2	144-012	BRAKE ROD
	20.6	4	1/2 - 13 UNC x 1.75"	HEX HEAD CAP SCREW
	20.7	4	1/2-13 UNC x 1.5	FLAT HEAD CAP SCREW
	20.8	4	1/2" WASHER	STANDARD WASHER
	20.9	2	3/8-16 UNC x 0.625	Hexagon Socket Set Screw - Flat Point
	21	AS NEC.	GL171-157-05	OUTBOARD STAND SHIM STOCK - 0.005"
			GL171-157-10	OUTBOARD STAND SHIM STOCK - 0.010"
			GL171-157-31	OUTBOARD STAND SHIM STOCK - 0.031"
	22	1	GL100-159	ELECTRICAL ENCLOSURE, HOFFMAN A806CH - MODIFIED
	23	1	GL100-165	FELT DUST SEAL
	24	2	1 - 8 UNC x 5	ALL THREAD - GRADE 5
	25	6	1 - 8 UNC x 3.5"	SOCKET HEAD CAP SCREW
	26	2	1 - 8 UNC NUT	HEAVY HEX NUT
	27	8	1" WASHER	SAE WASHER
	28	8	M18 LOCK WASHER	HELICAL SPRING LOCK WASHER - BODY BOLT
	29	2	3/4-10 UNCx0.75	HALF DOG SET SCREW
	30	1	1/2-13 UNCx0.5	HALF DOG SET SCREW
	31	6	3/8-16 UNC x 4	FLAT HEAD CAP SCREWS
	32	8	3/8 - 16 UNC x 1.5	SOCKET HEAD CAP SCREW
C	33	3	3/8 - 16 UNC x 1	SOCKET HEAD CAP SCREW
	34	4	3/8 - 16 UNC x 0.625"	WHIZ BOLT
C	35	8	3/8 WASHER	CAP SCREW LOCK WASHER
	36	4	#8-32 x 1/4"	SOCKET HEAD CAP SCREW
	37	4	#8 WASHER	INT. TOOTH LOCKWASHER
	38	1	ECN 113 52810061	50mm HEIDENHAIN ENCODER
	39	4	#6 U x 0.3125	DRIVE SCREW
E	40	1	P-173	MOTOR TAG - PMAC GEARLESS MACHINE
	41	1	P-211	TAG, GL131 - BRAKE RATINGS FOR MAYR #8
	42	4	1/2 - 13 UNC x 2.25"	HEX HEAD CAP SCREW
	43	4	1/2 - 13 UNC	NUT - STANDARD HEX
	44	4	1/2 LOCK WASHER	STANDARD LOCK WASHER
	45	4	1/2" WASHER	STANDARD WASHER
	46	1	620	NOT INCLUDED- SHOWN FOR CLARITY

WEIGHT: 2480.9 lbmass

E	UPDATE BRAKE PARTS LIST & TAGS, PUR #1260	LTL 12/19/19	C	WAS 6X, REMOVE 6X 3/8 WASHERS, PUR #1111	LTL 6/5/19
D	MAYR #8275066 WAS #8211833, PUR #1244	LTL 12/9/19	B	GL185-019 WAS GL171-019, PUR #788	LTL 6/23/16
C	3X GL100-094-1 WAS 1X GL100-094, 3X 3/8x1HHCS	LTL 6/5/19	A	PRODUCTION RELEASE, PUR #658	LTL 8/13/14

HOLLISTER-WHITNEY
ELEVATOR CO. LLC

TITLE: GEARLESS MACHINE, 1500# @ 50% CB, 1350# @ 45% CB, 1250 @ 40% CB 1:1 ROPED

THIS DRAWING IS SUPPLIED AS A REPRESENTATION OF THE EQUIPMENT HOLLISTER-WHITNEY ELEVATOR CO. LLC.("MANUFACTURER") HAS AGREED TO SUPPLY. SLIGHT ADJUSTMENTS MAY OCCUR DURING MANUFACTURING AND INSTALLATION. ANY MODIFICATIONS NOT APPROVED IN WRITING BY MANUFACTURER MAY AFFECT OPERATION, VOIDS ANY WARRANTY AND RELEASES MANUFACTURER OF ALL LIABILITY.
THIS DOCUMENT CONTAINS CONFIDENTIAL AND PROPRIETARY INFORMATION THAT CANNOT BE REPRODUCED OR DIVULGED, IN WHOLE OR IN PART, WITHOUT WRITTEN AUTHORIZATION FROM THE MANUFACTURER.

THIRD ANGLE PROJECTION

DRAWN BY	SCALE	MATERIAL	REFERENCE TOL.
LTL	1 / 5	SEE PARTS LIST	ALL DIMENSIONS REFERENCE UNLESS OTHERWISE SPECIFIED
SHEET SIZE: D		DATE: 8/13/2014	GL131-620
			SHEET 1 OF 2

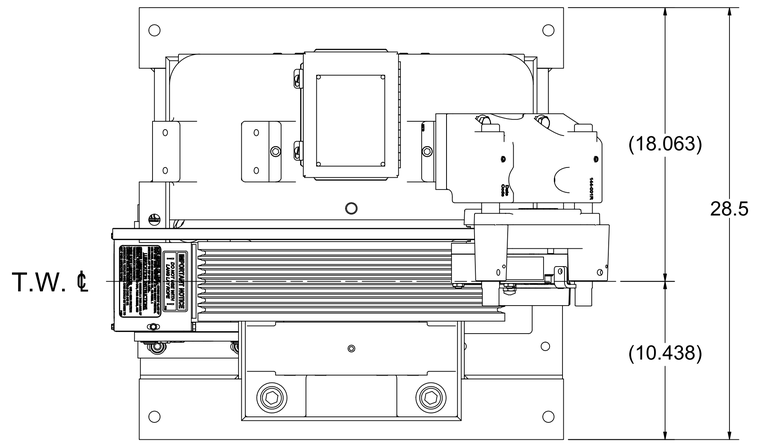

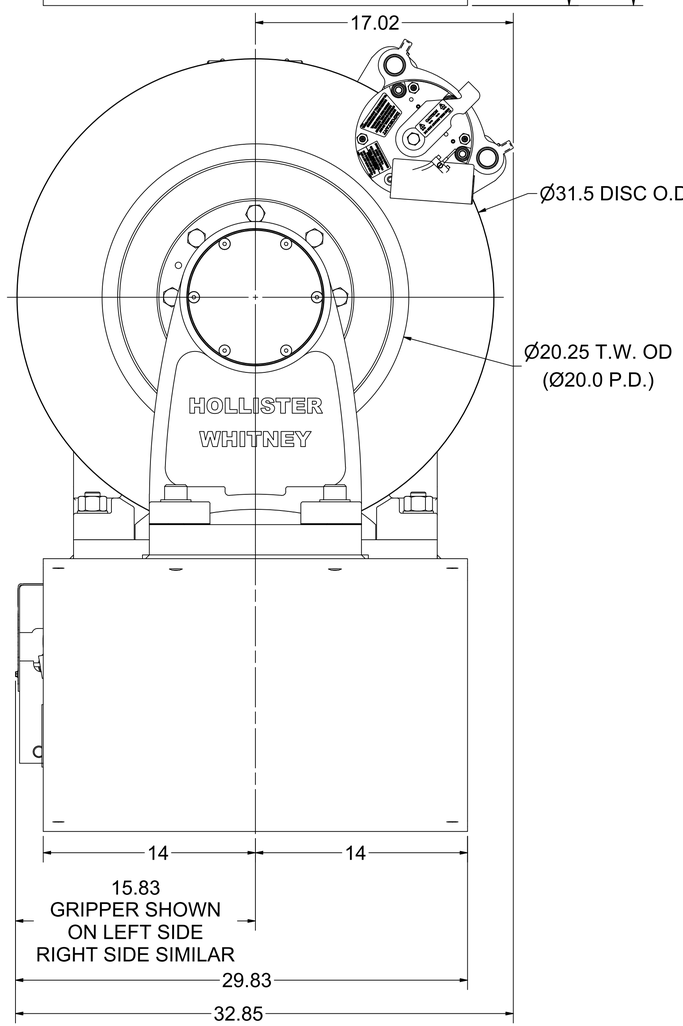

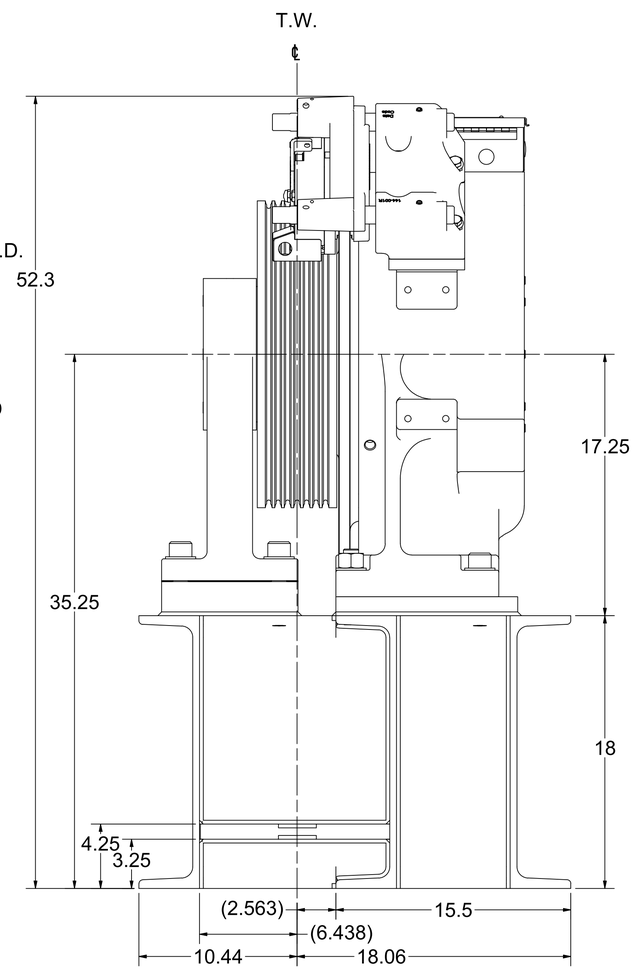

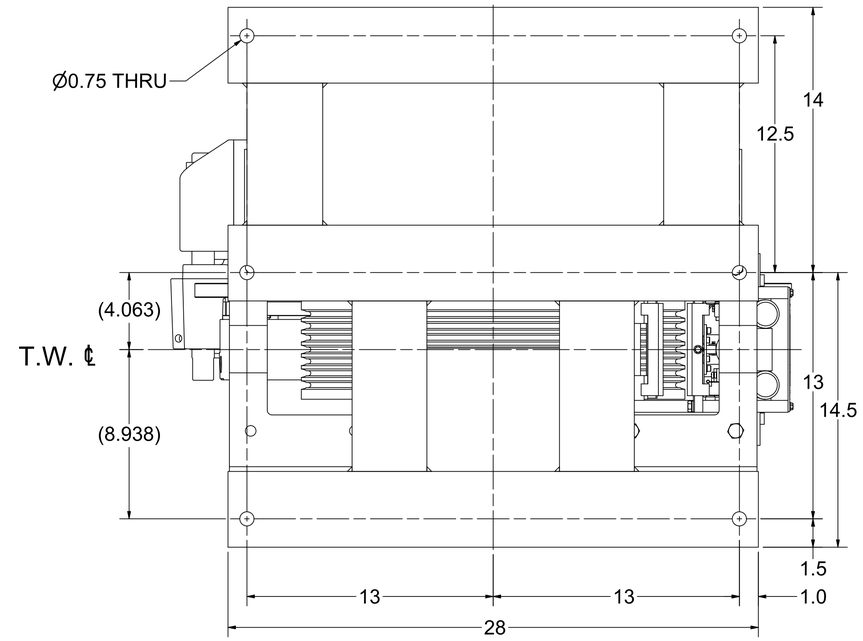

SEE OTHER
SIDE FOR
REVISIONS

WEIGHT: 2480.9 lbmass

HOLLISTER-WHITNEY
ELEVATOR CO. LLC

TITLE
GEARLESS MACHINE, 1500# @ 50% CB, 1350# @ 45% CB, 1250 @ 40% CB 1:1 ROPED

THIS DRAWING IS SUPPLIED AS A REPRESENTATION OF THE EQUIPMENT HOLLISTER-WHITNEY ELEVATOR CO. LLC ("MANUFACTURER") HAS AGREED TO SUPPLY. SLIGHT ADJUSTMENTS MAY OCCUR DURING MANUFACTURING AND INSTALLATION. ANY MODIFICATIONS NOT APPROVED IN WRITING BY MANUFACTURER MAY AFFECT OPERATION, VOIDS ANY WARRANTY AND RELEASES MANUFACTURER OF ALL LIABILITY.
THIS DOCUMENT CONTAINS CONFIDENTIAL AND PROPRIETARY INFORMATION THAT CANNOT BE REPRODUCED OR DIVULGED, IN WHOLE OR IN PART, WITHOUT WRITTEN AUTHORIZATION FROM THE MANUFACTURER.

THIRD ANGLE PROJECTION

DRAWN BY	SCALE	MATERIAL	REFERENCE TOL.
LTL	1 / 5	SEE PARTS LIST	ALL DIMENSIONS REFERENCE UNLESS OTHERWISE SPECIFIED
SHEET SIZE D		DATE 8/13/2014	GL131-620 SHEET 2 OF 2

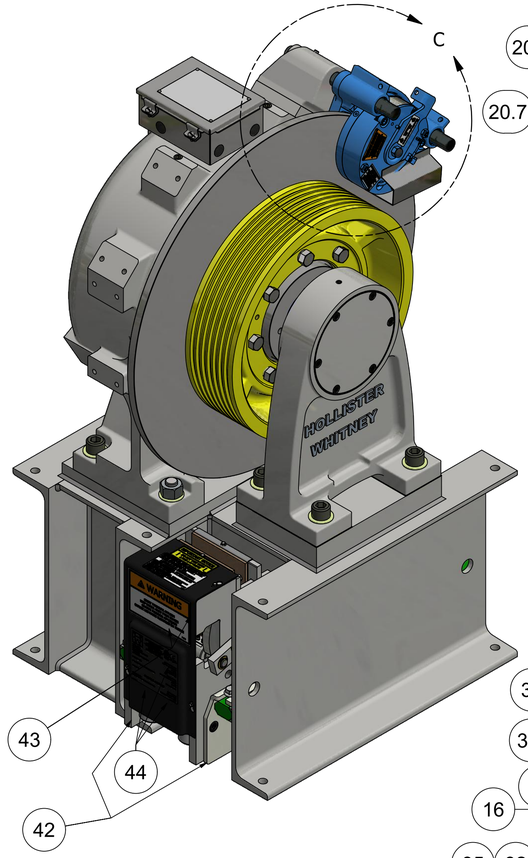

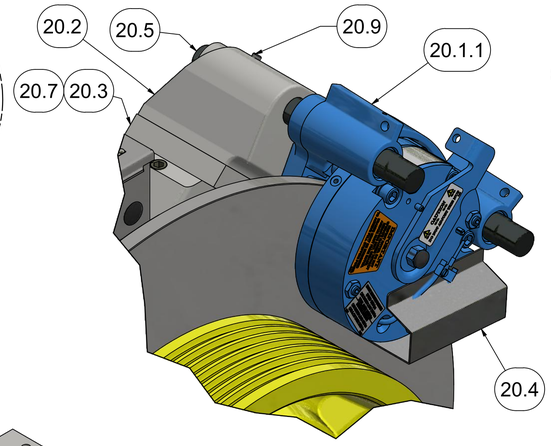

DETAIL C

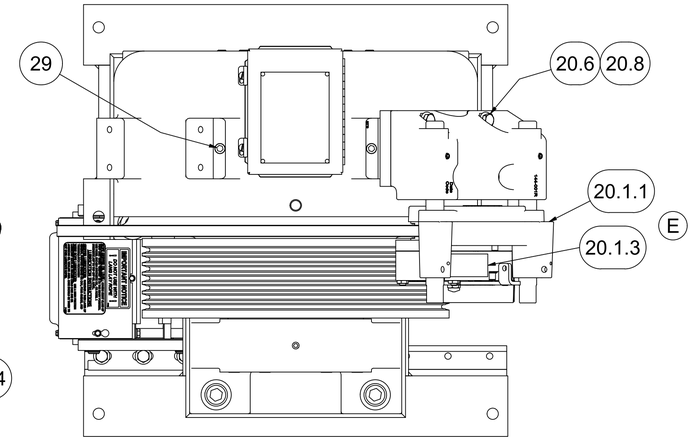

1:1 APPLICATIONS USING 2:1 WINDINGS						
MACHINE #	WINDING P/N	COIL/WINDING EFFICIENCY (%)	FRAME/MAGNET SIZE (mm)	VOLTAGE (Vac)	MACHINE SPEED (rpm)	CAR SPEED 20" (fpm)
GL131-20L	GL130-170-200	90.6	130	170	101.9	533
GL131-20H	GL130-360-200	90.7	130	360	101.9	533
GL131-35L	GL130-170-350	93.1	130	170	178.3	933
GL131-35H	GL130-360-350	93	130	360	178.3	933

MACHINE REQUIRES ONE (1) PRIMARY SERVICE BRAKE AND ONE ROPE GRIPPER FOR EMERGENCY SERVICE. 622 ROPE GRIPPER (NOT INCLUDED) SHOWN ON LEFT SIDE, RIGHT SIDE SIMILAR. ROPE GRIPPER MOUNTING ANGLES AND BOLT-DOWN HARDWARE INCLUDED.

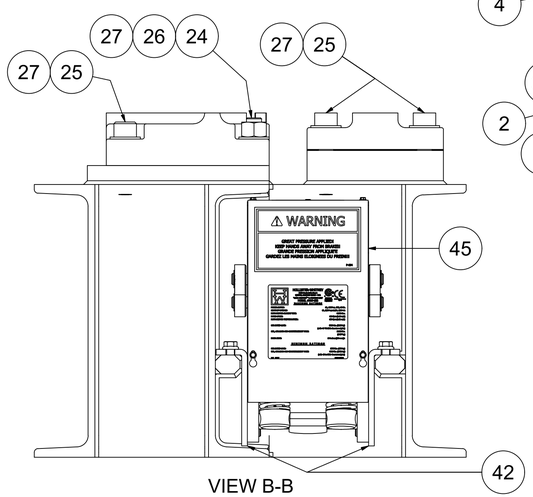

VIEW B-B

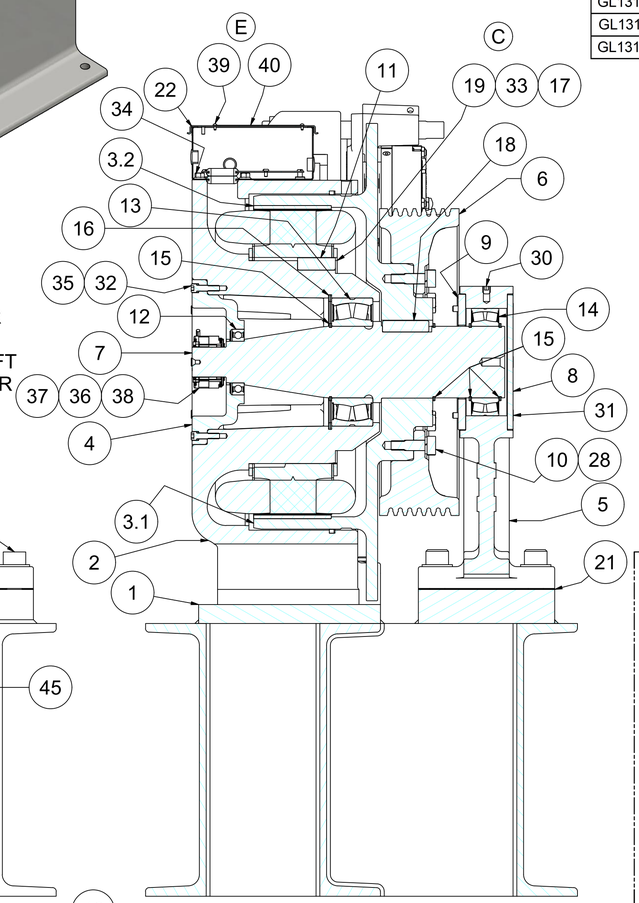

SECTION A-A

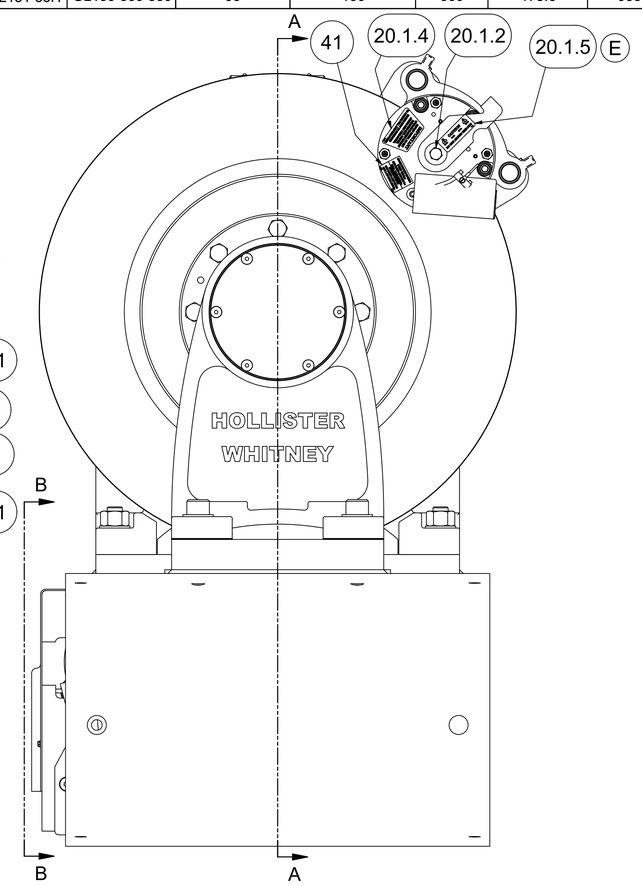

	ITEM	QTY	PART NUMBER	DESCRIPTION
	1	1	GL171B-622	BASE FABRICATION - FINISHED
	2	1	GL130-001	BASE HOUSING, MOTOR #GL130
	3	1	GL131-002	ROTOR ASSEMBLY, MOTOR #GL131
	3.1	1	GL131-004	ROTOR
	3.2	28	GL130-099	PERMANENT MAGNET - MOTOR #GL130
	4	1	GL130A-005	BEARING CAP
	5	1	GL171-006	OUTBOARD STAND, AC GEARLESS
	6	1	GL100-010	20" TRACTION SHEAVE (WIDE)
	7	1	GL131-018	MAIN SHAFT
B	8	1	GL185-019	END CAP
	9	1	GL171-020	BEARING END CAP
	10	8	GL100-073	BODY BOLT
	11	1	GL100-088	KEY - STATOR CORE TO BASE
	12	1	GL185-089	BEARING, SEALED SINGLE ROW DEEP GROOVE BALL
	13	1	GL130-090	SEALED SPHERICAL ROLLER BEARING
	14	1	GL185-090	BEARING, SEALED SPHERICAL ROLLER
	15	4	GL130-092	RETAINING RING - SHAFT
	16	1	GL130-093	RETAINING RING - HOUSING
C	17	3	GL100-094-1	CLAMP - STATOR ASSEMBLY
	18	1	GL100-095	KEY - ROTOR TO SHAFT
	19	1	GL130-100	WINDING ASSEMBLY - 28 POLE
	20	1	GL130-144	DISC BRAKE (MAYR #8) - MRL
	20.1	1	GL130-144-115S	MAYR #8 BRAKE WITH STANDARD STICKERS
D	20.1.1	1	GL130-144-115	MAYR #8; RSD8/894.510.03S 52V #8275066
	20.1.2	1	142-050	BLACK VINYL CAP
E	20.1.3	1	P-175	TAG, GEARLESS MACHINE BRAKE AIRGAP DATA
	20.1.4	1	P-190	ROTOR INSPECTION & BRAKE BURNISHING STICKER
	20.1.5	1	P-229	CAUTION LABEL - DO NOT ADJUST THIS NUT
	20.2	1	144-001	BRAKE BASE
	20.3	1	144-002	ADAPTOR PLATE - BRAKE BASE
	20.4	1	144-003	COVER - MAYR #8 ELECTRICAL
	20.5	2	144-012	BRAKE ROD
	20.6	4	1/2 - 13 UNC x 1.75"	HEX HEAD CAP SCREW
	20.7	4	1/2-13 UNC x 1.5	FLAT HEAD CAP SCREW
	20.8	4	1/2" WASHER	STANDARD WASHER
	20.9	2	3/8-16 UNC x 0.625	FLAT POINT SET SCREW
	21	AS NEC.	GL171-157-05	OUTBOARD STAND SHIM STOCK - 0.005"
			GL171-157-10	OUTBOARD STAND SHIM STOCK - 0.010"
			GL171-157-31	OUTBOARD STAND SHIM STOCK - 0.031"
	22	1	GL100-159	ELECTRICAL ENCLOSURE, HOFFMAN A806CH - MODIFIED
	23	1	GL100-165	FELT DUST SEAL
	24	2	1 - 8 UNC x 5	ALL THREAD - GRADE 5
	25	6	1 - 8 UNC x 3.5"	SOCKET HEAD CAP SCREW
	26	2	1 - 8 UNC NUT	HEAVY HEX NUT
	27	8	1" WASHER	SAE WASHER
	28	8	M18 LOCK WASHER	HELICAL SPRING LOCK WASHER - BODY BOLT
	29	2	3/4-10 UNCx0.75	HALF DOG SET SCREW
	30	1	1/2-13 UNCx0.5	HALF DOG SET SCREW
	31	6	3/8-16 UNC x 4	FLAT HEAD CAP SCREWS
	32	8	3/8 - 16 UNC x 1.5	SOCKET HEAD CAP SCREW
C	33	3	3/8 - 16 UNC x 1	SOCKET HEAD CAP SCREW
	34	4	3/8 - 16 UNC x 0.625"	WHIZ BOLT
C	35	8	0.375 WASHER	CAP SCREW LOCK WASHER
	36	4	#8-32 x 1/4"	SOCKET HEAD CAP SCREW
	37	4	#8 WASHER	INT. TOOTH LOCKWASHER
	38	1	ECN 113 52810061	50mm HEIDENHAIN ENCODER
	39	4	#6 U x 0.3125	DRIVE SCREW
E	40	1	P-173	MOTOR TAG - PMAC GEARLESS MACHINE
	41	1	P-211	TAG, GL131 - BRAKE RATINGS FOR MAYR #8
	42	2	622-041-GL	MOUNTING ANGLE, GL171-622 BASE
	43	6	1/2-13 UNC x 1.25	FLANGE HEAD HEX BOLT
	44	6	1/2 - 13 UNC x 1.25	FLAT HEAD CAP SCREW
	45	1	622	NOT INCLUDED, SHOWN FOR CLARITY ONLY

WEIGHT: 2458.5 lbmass

E	UPDATE BRAKE PARTS LIST & TAGS, PUR #1260	LTL 12/19/19	C	WAS 6X, REMOVE 6X 3/8 WASHERS, PUR #1111	LTL 6/5/19
D	MAYR #8275066 WAS #8211833, PUR #1244	LTL 12/9/19	B	GL185-019 WAS GL171-019, PUR #788	LTL 6/23/16
C	3X GL100-094-1 WAS 1X GL100-094, 3X 3/8x1HHCS	LTL 6/5/19	A	PRODUCTION RELEASE, PUR #658	LTL 8/14/14

HOLLISTER-WHITNEY
ELEVATOR CO. LLC

TITLE: GEARLESS MACHINE, 1500# @ 50% CB, 1350# @ 45% CB, 1250 @ 40% CB 1:1 ROPED

THIS DRAWING IS SUPPLIED AS A REPRESENTATION OF THE EQUIPMENT HOLLISTER-WHITNEY ELEVATOR CO. LLC ("MANUFACTURER") HAS AGREED TO SUPPLY. SLIGHT ADJUSTMENTS MAY OCCUR DURING MANUFACTURING AND INSTALLATION. ANY MODIFICATIONS NOT APPROVED IN WRITING BY MANUFACTURER MAY AFFECT OPERATION, VOIDS ANY WARRANTY AND RELEASES MANUFACTURER OF ALL LIABILITY.
THIS DOCUMENT CONTAINS CONFIDENTIAL AND PROPRIETARY INFORMATION THAT CANNOT BE REPRODUCED OR DIVULGED, IN WHOLE OR IN PART, WITHOUT WRITTEN AUTHORIZATION FROM THE MANUFACTURER.

THIRD ANGLE PROJECTION

DRAWN BY	SCALE	MATERIAL	REFERENCE TOL.
LTL	1/5	SEE PARTS LIST	ALL DIMENSIONS REFERENCE UNLESS OTHERWISE SPECIFIED
SHEET SIZE: D		DATE: 8/13/2014	GL131-622

SHEET 1 OF 2

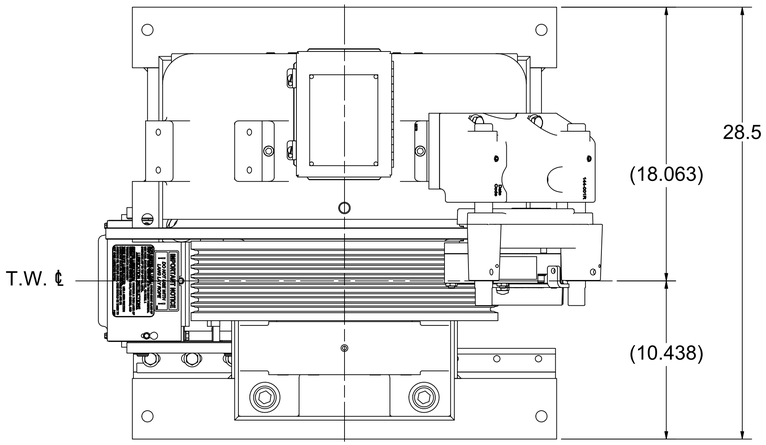

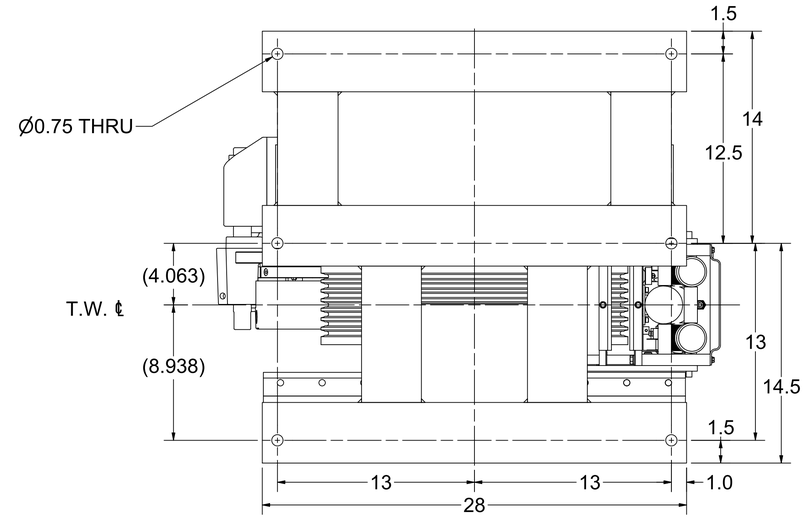

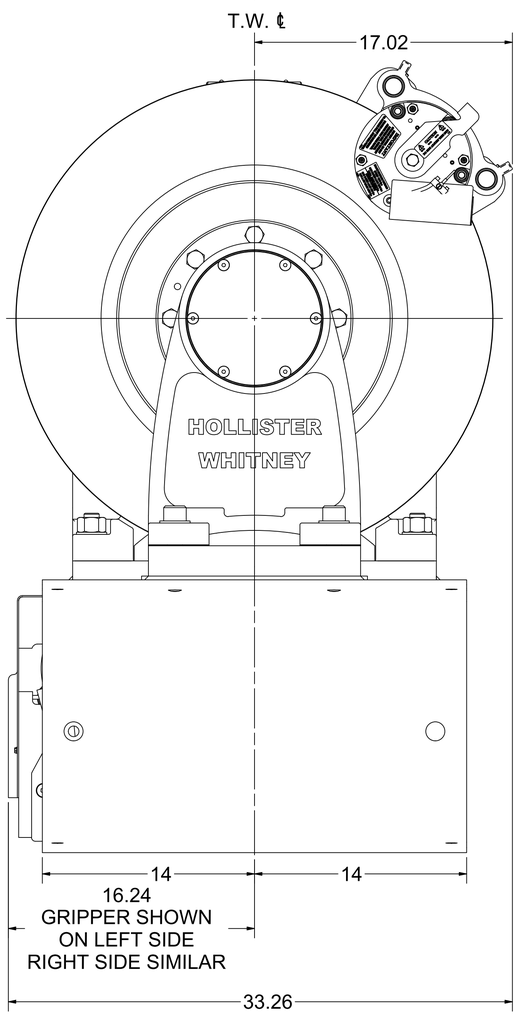

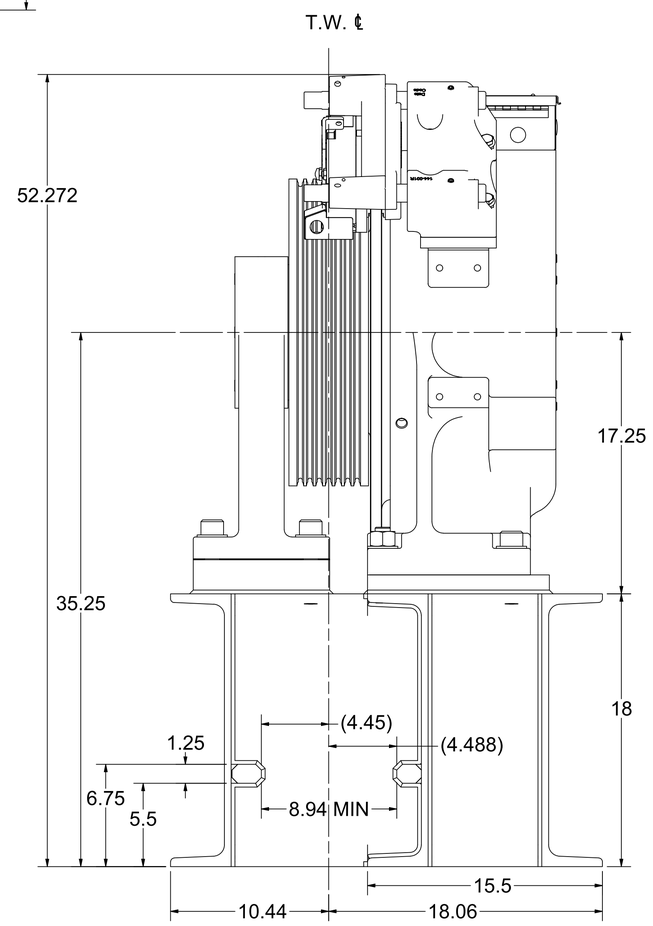

SEE OTHER
SIDE FOR
REVISIONS

WEIGHT: 2458.5 lbmass

HOLLISTER-WHITNEY
ELEVATOR CO. LLC

TITLE
GEARLESS MACHINE, 1500# @ 50% CB, 1350# @ 45% CB, 1250 @ 40% CB 1:1 ROPED

THIS DRAWING IS SUPPLIED AS A REPRESENTATION OF THE EQUIPMENT HOLLISTER-WHITNEY ELEVATOR CO. LLC ("MANUFACTURER") HAS AGREED TO SUPPLY. SLIGHT ADJUSTMENTS MAY OCCUR DURING MANUFACTURING AND INSTALLATION. ANY MODIFICATIONS NOT APPROVED IN WRITING BY MANUFACTURER MAY AFFECT OPERATION, VOIDS ANY WARRANTY AND RELEASES MANUFACTURER OF ALL LIABILITY.
THIS DOCUMENT CONTAINS CONFIDENTIAL AND PROPRIETARY INFORMATION THAT CANNOT BE REPRODUCED OR DIVULGED, IN WHOLE OR IN PART, WITHOUT WRITTEN AUTHORIZATION FROM THE MANUFACTURER.

THIRD ANGLE PROJECTION

DRAWN BY	SCALE	MATERIAL	REFERENCE TOL.
LTL	1/5	SEE PARTS LIST	ALL DIMENSIONS REFERENCE UNLESS OTHERWISE SPECIFIED
SHEET SIZE D		DATE 8/13/2014	GL131-622 SHEET 2 OF 2

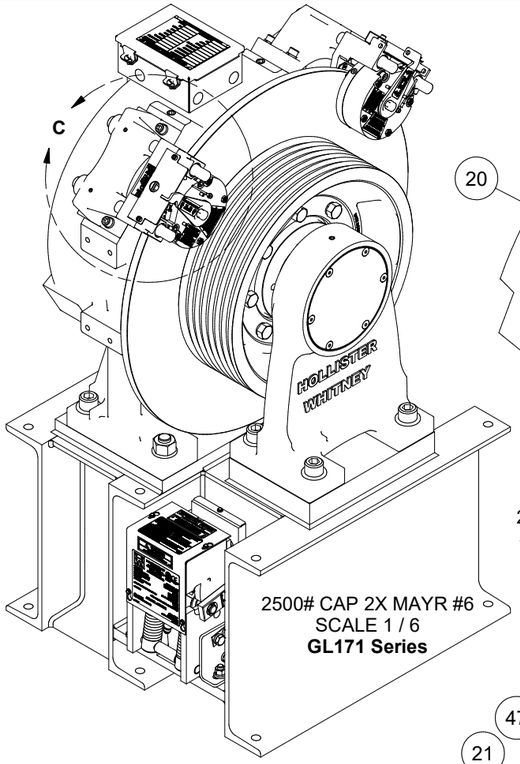

2500# CAP 2X MAYR #6
SCALE 1 / 6
GL171 Series

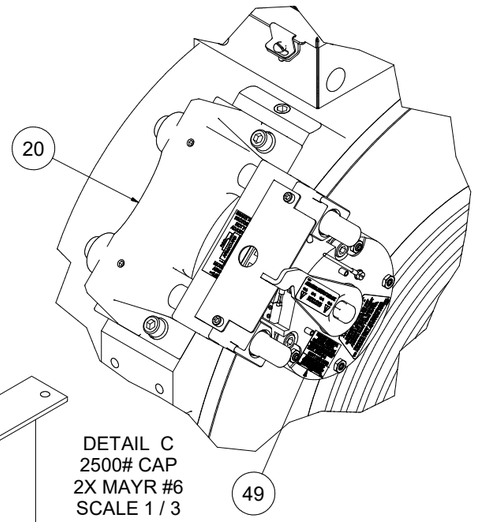

DETAIL C
2500# CAP
2X MAYR #6
SCALE 1 / 3

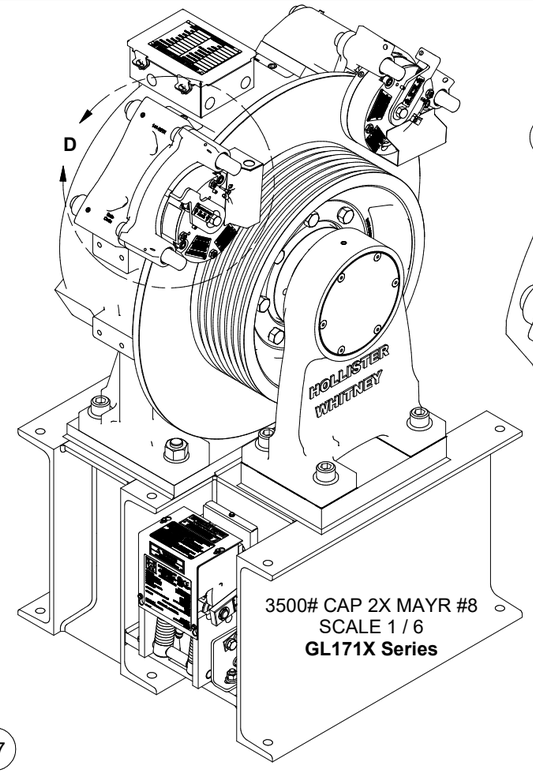

3500# CAP 2X MAYR #8
SCALE 1 / 6
GL171X Series

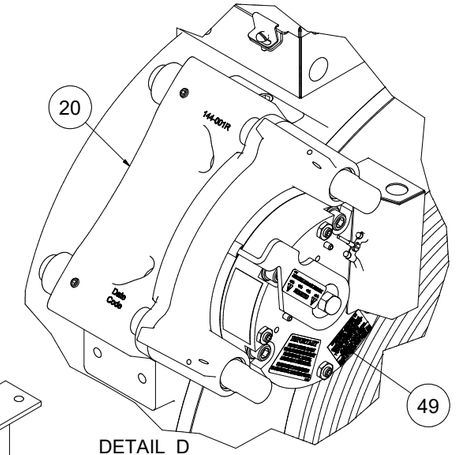

DETAIL D
3500# CAP
2X MAYR #8
SCALE 1 / 3

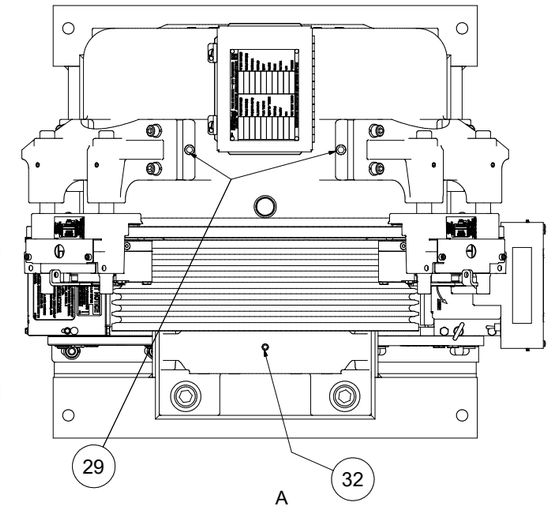

MACHINE MAY REQUIRE TWO (2) PRIMARY SERVICE BRAKES DEPENDING ON DUTY (SEE DUTY CHART FOLLOWING PAGES) AND ONE ROPE GRIPPER FOR EMERGENCY SERVICE. ROPE GRIPPER (NOT INCLUDED) SHOWN. LEFT SIDE AND RIGHT SIDE SIMILAR.
BOLT-DOWN HARDWARE INCLUDED.

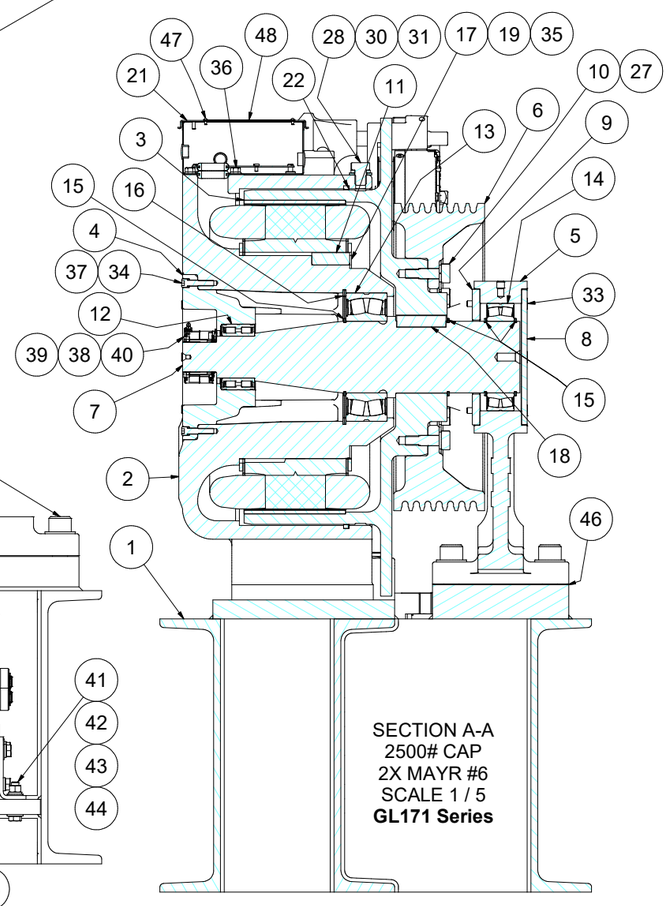

SECTION A-A
2500# CAP
2X MAYR #6
SCALE 1 / 5
GL171 Series

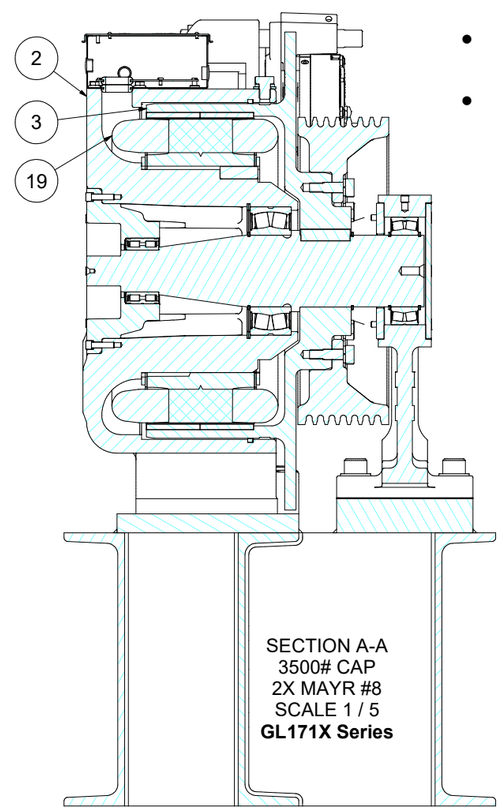

SECTION A-A
3500# CAP
2X MAYR #8
SCALE 1 / 5
GL171X Series

- SEE PAGE 2 FOR PARTS LIST AND RATINGS
- SEE PAGE 3 FOR OVERALL DIMENSIONS

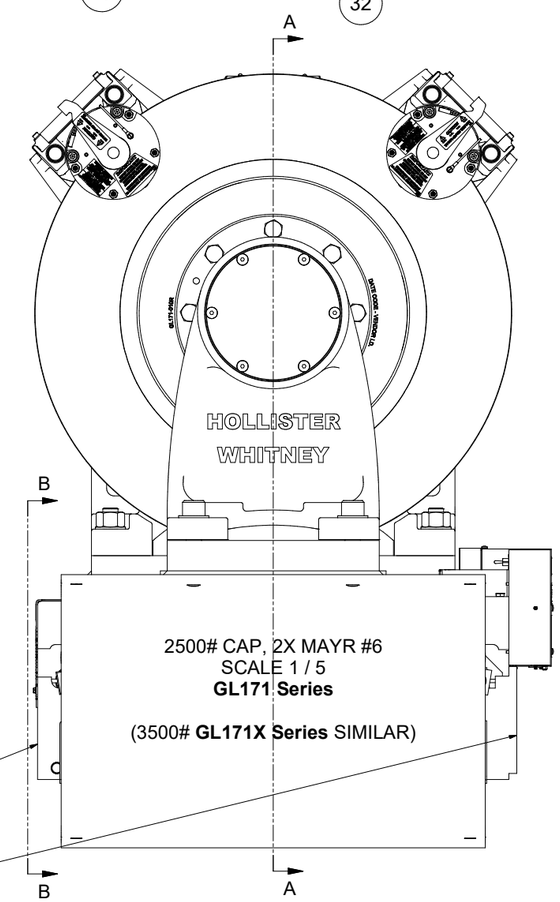

2500# CAP, 2X MAYR #6
SCALE 1 / 5
GL171 Series

(3500# **GL171X Series** SIMILAR)

620 ROPE GRIPPER
(NOT INCLUDED)

620L ROPE GRIPPER
(NOT INCLUDED)

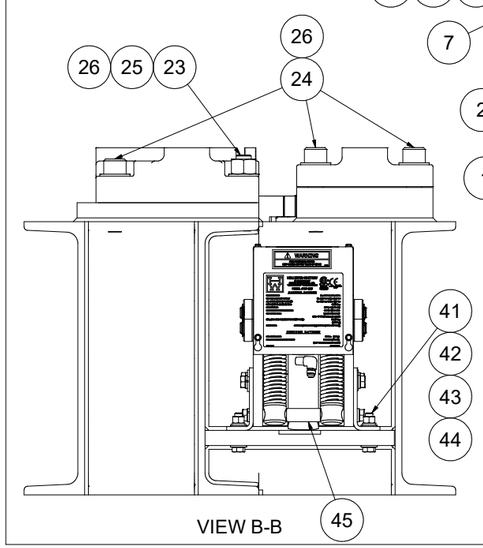

VIEW B-B

WEIGHT: 2837.6 lbmass

			K	ADD 3500# CAPACITY MACHINE w/BRAKES, ROTOR, HOUSING, WIDE 20" WHEEL, 620L OPTION. REDRAW, PUR #1712	LTL 12/8/22

HOLLISTER-WHITNEY
ELEVATOR CO. LLC

TITLE: GEARLESS MACHINE W/620

THIS DRAWING IS SUPPLIED AS A REPRESENTATION OF THE EQUIPMENT HOLLISTER-WHITNEY ELEVATOR CO. LLC ("MANUFACTURER") HAS AGREED TO SUPPLY. SLIGHT ADJUSTMENTS MAY OCCUR DURING MANUFACTURING AND INSTALLATION. ANY MODIFICATIONS NOT APPROVED IN WRITING BY MANUFACTURER MAY AFFECT OPERATION, VOIDS ANY WARRANTY AND RELEASES MANUFACTURER OF ALL LIABILITY.
THIS DOCUMENT CONTAINS CONFIDENTIAL AND PROPRIETARY INFORMATION THAT CANNOT BE REPRODUCED OR DIVULGED, IN WHOLE OR IN PART, WITHOUT WRITTEN AUTHORIZATION FROM THE MANUFACTURER.

THIRD ANGLE PROJECTION

DRAWN BY	SCALE	MATERIAL	REFERENCE TOL.
LTL	1 / 5	SEE PARTS LIST	ALL DIMENSIONS REFERENCE UNLESS OTHERWISE SPECIFIED
SHEET SIZE: D		DATE: 11/1/2012	GL171-620 SHEET 1 OF 3

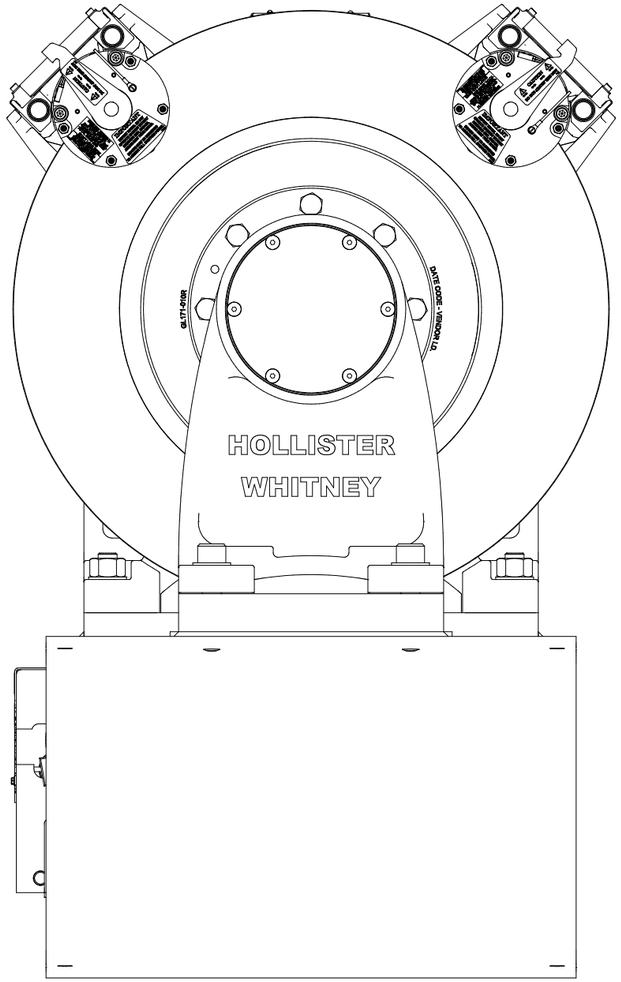

2500# CAPACITY, 2X MAYR #
SCALE 1 / 4
GL171 Series

ITEM	QTY	PART NUMBER	DESCRIPTION
1	1	GL171B-620	BASE FABRICATION - FINISHED
2	1	GL170-001	BASE HOUSING, MOTOR #GL170
		GL180-001	BASE HOUSING, MOTOR #GL181
3	1	GL171-002	ROTOR ASSEMBLY, MOTOR #GL171, to 2500# CAP 50% CB
		GL181-002	ROTOR ASSEMBLY, MOTOR #GL181, to 3500# CAP 50% CB
4	1	GL130-005	BEARING CAP
5	1	GL171-006	OUTBOARD STAND, AC GEARLESS
6	1	GL171-010	20" SHEAVE, 7 x 1/2" ROPE MAX
7	1	GL171-018	MAIN SHAFT
8	1	GL185-019	END CAP
9	1	GL171-020	BEARING END CAP
10	8	GL100-073	BODY BOLT
11	1	GL100-088	KEY - STATOR CORE TO BASE
12	1	GL100-089	Bearing, Sealed Double Row Cylindrical Roller
13	1	GL130-090	SEALED SPHERICAL ROLLER BEARING
14	1	GL185-090	BEARING, SEALED SPHERICAL ROLLER
15	4	GL130-092	RETAINING RING - SHAFT
16	1	GL130-093	RETAINING RING - HOUSING
17	3	GL100-094-1	CLAMP - STATOR ASSEMBLY
18	1	GL171-095	KEY - MAIN SHAFT TO ROTOR
19	1	GL181-100	WINDING ASSEMBLY - 28 POLE, 1:1 Application
		GL171-100	WINDING ASSEMBLY - 28 POLE, 1:1 Application
		GL170-100	WINDING ASSEMBLY - 28 POLE (2:1 IN 1:1 APL), SEE BELOW
20	1	GL130-144	DISC BRAKE (MAYR #8) - THRU 1875# CAP 50% CB
	2	GL100-146	DISC BRAKE (MAYR #6) - 1876# TO 2500# CAP 50% CB
	2	GL130-144	DISC BRAKE (MAYR #8) - 2501# TO 3500# CAP 50% CB
21	1	GL100-159	ELECTRICAL ENCLOSURE, HOFFMAN A806CH - MODIFIED
22	1	GL100-165	FELT DUST SEAL
23	2	1 - 8 UNC x 5	ALL THREAD - GRADE 5
24	6	1 - 8 UNC x 3.5"	SOCKET HEAD CAP SCREW
25	2	1 - 8 UNC NUT	HEAVY HEX NUT
26	8	1" WASHER	SAE WASHER
27	8	M18 LOCK WASHER	HELICAL SPRING LOCK WASHER - BODY BOLT
28	3	3/4 - 10 UNC x 1.0	HEX HEAD CAP SCREW
29	2	3/4-10 UNC x 0.75	Hexagon Socket Set Screw - Flat Point
30	3	3/4 WASHER	SAE WASHER
31	3	3/4" WASHER	STANDARD LOCK WASHER
32	1	1/2-13 UNC x 0.5	Hexagon Socket Set Screw - Flat Point
33	6	3/8-16 UNC x 4	FLAT HEAD CAP SCREWS
34	8	3/8 - 16 UNC - 1 1/2	Hexagon Socket Head Cap Screw
35	3	3/8 - 16 UNC - 1	Hexagon Socket Head Cap Screw
36	4	3/8-16 UNC x 0.625	Hex Flange Screw - Regular Thread - Inch
37	8	0.375 WASHER	CAP SCREW LOCK WASHER
38	4	#8-32 x 1/4"	SOCKET HEAD CAP SCREW
39	4	#8 WASHER	INT. TOOTH LOCKWASHER
40	1	ENC-113	#81800-61 2048PPR 50mm HEIDENHAIN ENCODER
41	4	1/2-13 UNC - 2.25	Hex Cap Screw
42	4	1/2 - 13 UNC	Hex Nuts (Inch Series) Hex Nut
43	4	1/2 WASHER	Regular Helical Spring Lock Washers(Inch Series)
44	4	1/2 WASHER	Plain Washer (Inch)Type A and B
45	1	620 OR 620L	NOT INCLUDED- 620 SHOWN FOR CLARITY
46	AS NEC.	GL171-157-05	OUTBOARD STAND SHIM STOCK - 0.005"
		GL171-157-10	OUTBOARD STAND SHIM - 0.010"
		GL171-157-31	OUTBOARD STAND SHIM STOCK - 0.031"
47	4	#6 U x 0.3125	DRIVE SCREW
48	1	P-173	MOTOR TAG - PMAC GEARLESS MACHINE
49	1 or 2	P-242	TAG, GL171 OR GL181 - BRAKE RATINGS FOR MAYR #8
	2	P-212	TAG, GL171 - BRAKE RATINGS FOR MAYR #6

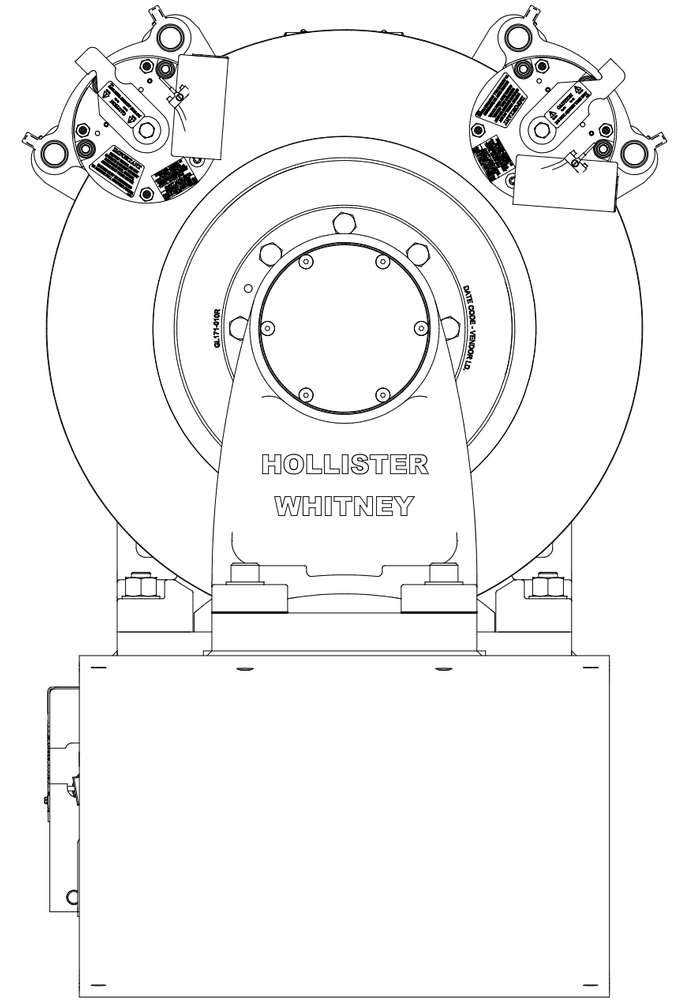

3500# CAPACITY, 2X MAYR #8
SCALE 1 / 4
GL171X Series

	TRACTION WHEEL	ROPING	COUNTER BALANCE %					BRAKES REQUIRED
			50	47.5	45	42.5	40	
			CAPACITY (LBS)					
GL171-70	20"	1:1	1875	1775	1700	1625	1550	1X MAYR #8
		2:1	3750	3550	3400	3250	3125	
GL171-40 GL171-20	20"	1:1	2500	2400	2325	2250	2200	2X MAYR #6
		2:1	5000	4825	4675	4525	4400	
GL171X-35	20"	1:1	3500	3325	3175	3025	2900	2X MAYR #8
		2:1	7000	6650	6350	6050	5800	

THESE APPLICATIONS USING WINDINGS DESIGNED FOR 1:1											
						ROPED 1:1			ROPED 2:1		
MACHINE #	WINDING P/N	COIL/WINDING EFFICIENCY (%)	FRAME/MAGNET SIZE (mm)	VOLTAGE (Vac)	MACHINE SPEED (rpm)	CAR SPEED 20" (fpm)	CAR SPEED 15.75" (fpm)	CAR SPEED 15" (fpm)	CAR SPEED 20" (fpm)	CAR SPEED 15.75" (fpm)	CAR SPEED 15" (fpm)
GL171-20L	GL171-170-200	87	170	170	38.2	200	158	150	100	79	75
GL171-20H	GL171-360-200	87	170	360	38.2	200	158	150	100	79	75
GL171X-35H	GL181-380-350	87	170	380	66.8	350	276	263	175	138	131
GL171-40L	GL171-170-400	87	170	170	76.4	400	315	300	200	158	150
THESE APPLICATIONS USING WINDINGS DESIGNED FOR 2:1											
						ROPED 1:1			ROPED 2:1		
GL171-70L	GL170-170-350	93.9	170	170	178.3	933	735	700	467	368	350
GL171-70H	GL170-360-350	94	170	360	178.3	933	735	700	467	368	350

WEIGHT: 2837.6 lbmass

SEE PAGE 1 FOR REVISIONS

HOLLISTER-WHITNEY
ELEVATOR CO. LLC

TITLE: GEARLESS MACHINE W/620

THIS DRAWING IS SUPPLIED AS A REPRESENTATION OF THE EQUIPMENT HOLLISTER-WHITNEY ELEVATOR CO. LLC ("MANUFACTURER") HAS AGREED TO SUPPLY. SLIGHT ADJUSTMENTS MAY OCCUR DURING MANUFACTURING AND INSTALLATION. ANY MODIFICATIONS NOT APPROVED IN WRITING BY MANUFACTURER MAY AFFECT OPERATION, VOIDS ANY WARRANTY AND RELEASES MANUFACTURER OF ALL LIABILITY.
THIS DOCUMENT CONTAINS CONFIDENTIAL AND PROPRIETARY INFORMATION THAT CANNOT BE REPRODUCED OR DIVULGED, IN WHOLE OR IN PART, WITHOUT WRITTEN AUTHORIZATION FROM THE MANUFACTURER.

THIRD ANGLE PROJECTION

DRAWN BY	SCALE	MATERIAL	REFERENCE TOL.
LTL	1 / 4	SEE PARTS LIST	ALL DIMENSIONS REFERENCE UNLESS OTHERWISE SPECIFIED
SHEET SIZE: D		DATE: 11/1/2012	GL171-620

SHEET 2 OF 3

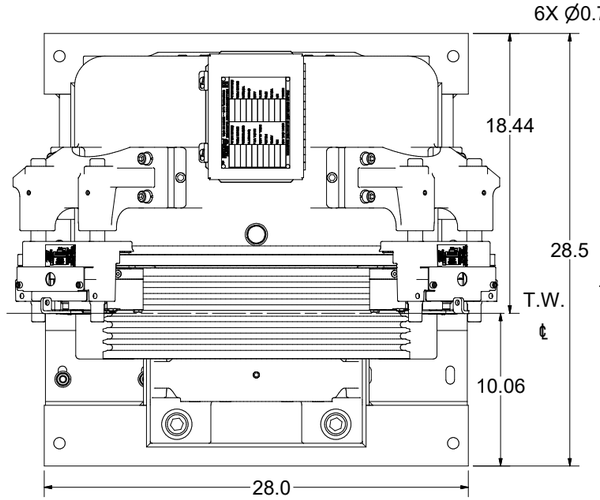

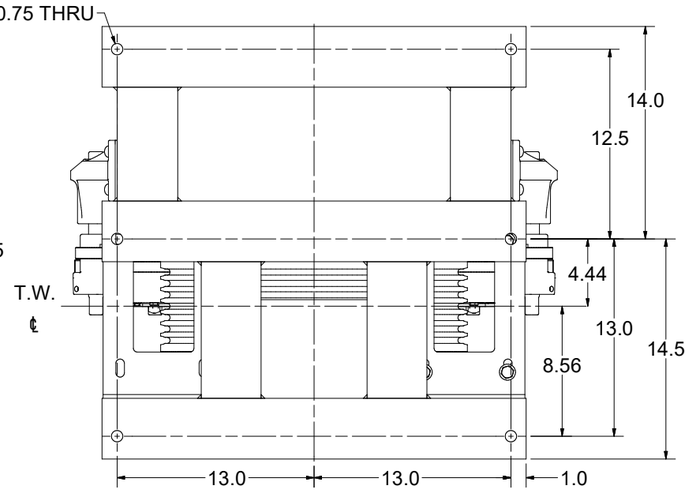

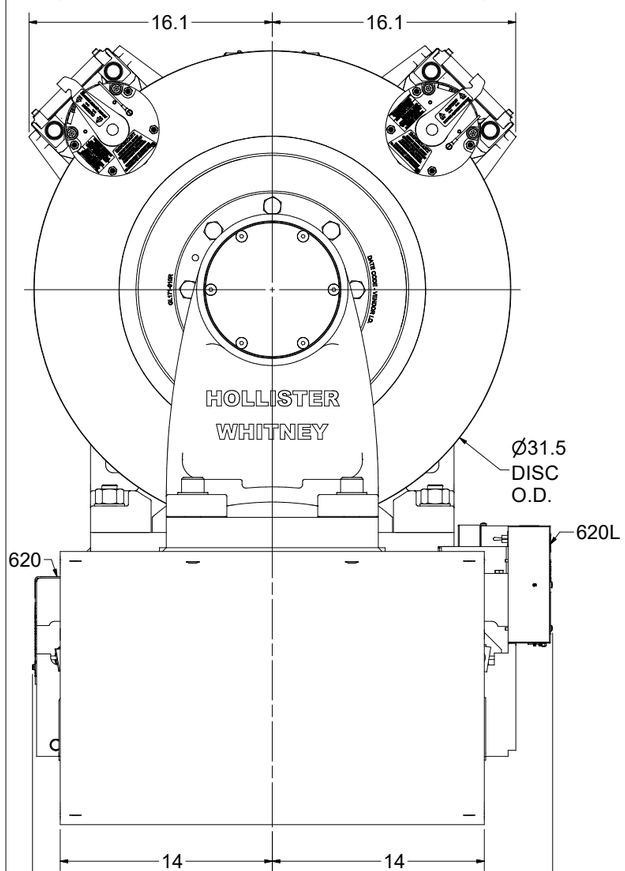

(15.83) 620 ROPE
GRIPPER SHOWN
ON LEFT SIDE
RIGHT SIDE SIMILAR

(18.50) 620L ROPE
GRIPPER SHOWN
ON RIGHT SIDE
LEFT SIDE SIMILAR

2500# CAP 2X MAYR #6
SCALE 1 / 5
GL171 Series

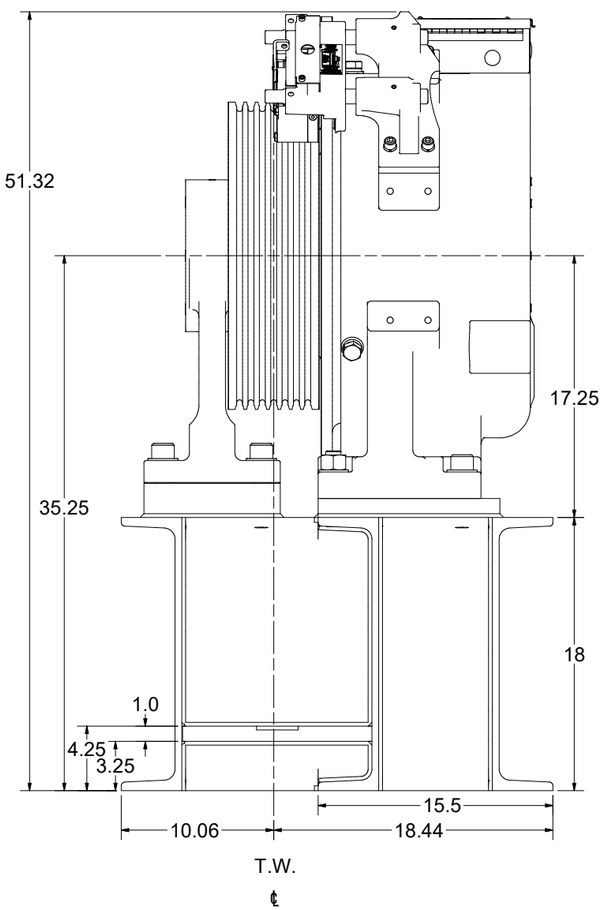

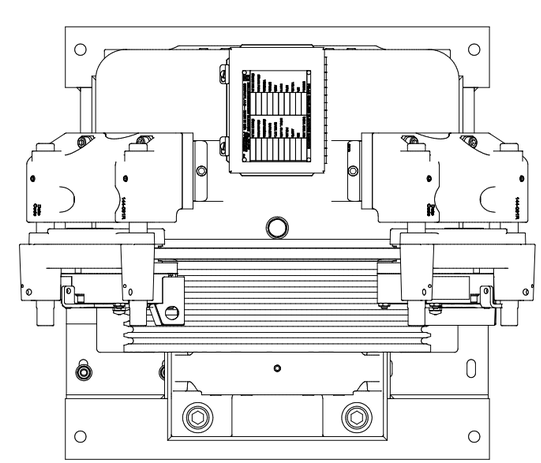

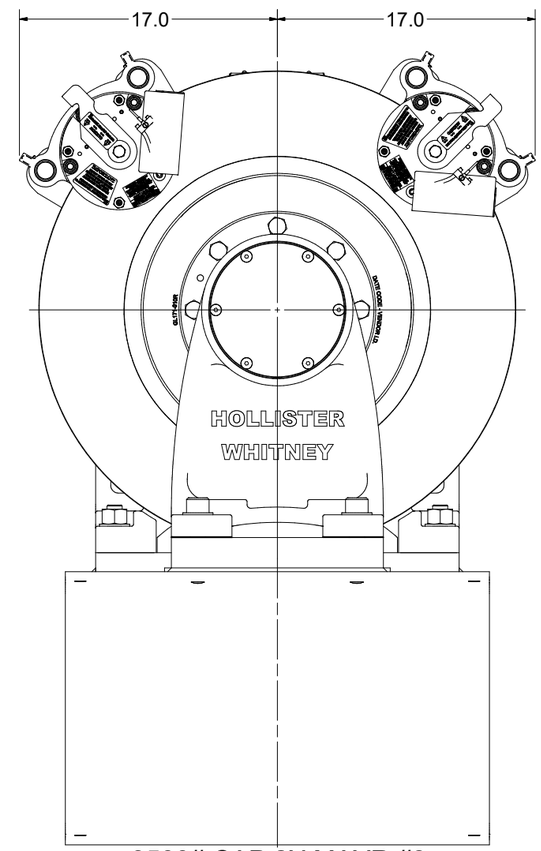

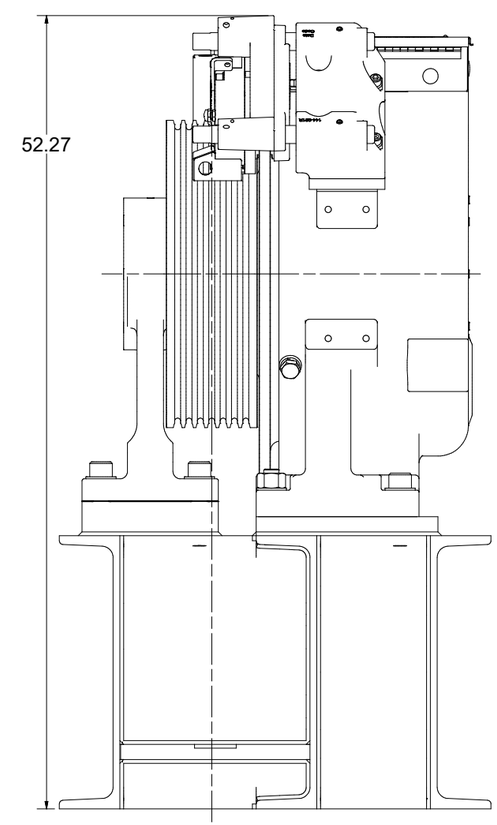

3500# CAP 2X MAYR #8
SCALE 1 / 5
GL171X Series

WEIGHT: 2837.6 lbmass

				SEE PAGE 1 FOR REVISIONS

HOLLISTER-WHITNEY
ELEVATOR CO. LLC

TITLE: GEARLESS MACHINE W/620

THIS DRAWING IS SUPPLIED AS A REPRESENTATION OF THE EQUIPMENT HOLLISTER-WHITNEY ELEVATOR CO. LLC ("MANUFACTURER") HAS AGREED TO SUPPLY. SLIGHT ADJUSTMENTS MAY OCCUR DURING MANUFACTURING AND INSTALLATION. ANY MODIFICATIONS NOT APPROVED IN WRITING BY MANUFACTURER MAY AFFECT OPERATION, VOIDS ANY WARRANTY AND RELEASES MANUFACTURER OF ALL LIABILITY.
THIS DOCUMENT CONTAINS CONFIDENTIAL AND PROPRIETARY INFORMATION THAT CANNOT BE REPRODUCED OR DIVULGED, IN WHOLE OR IN PART, WITHOUT WRITTEN AUTHORIZATION FROM THE MANUFACTURER.

THIRD ANGLE PROJECTION

DRAWN BY	SCALE	MATERIAL	REFERENCE TOL.
LTL	1 / 5	SEE PARTS LIST	ALL DIMENSIONS REFERENCE UNLESS OTHERWISE SPECIFIED
SHEET SIZE: D		DATE: 11/1/2012	GL171-620 SHEET 3 OF 3

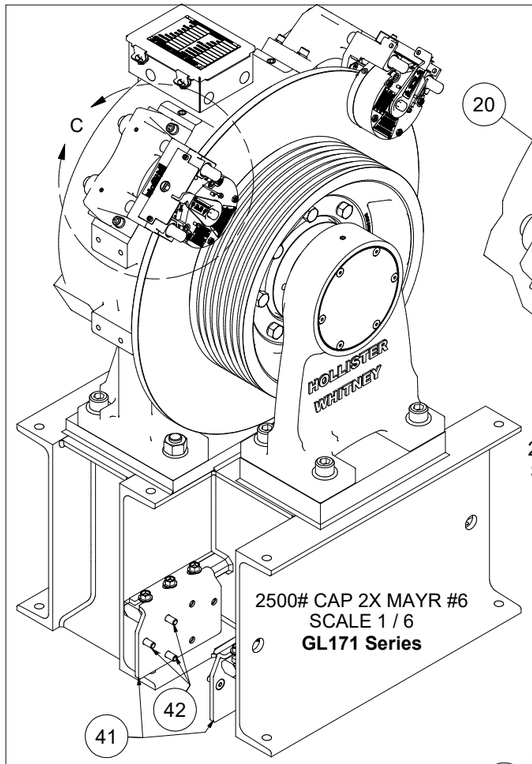

2500# CAP 2X MAYR #6
SCALE 1 / 6
GL171 Series

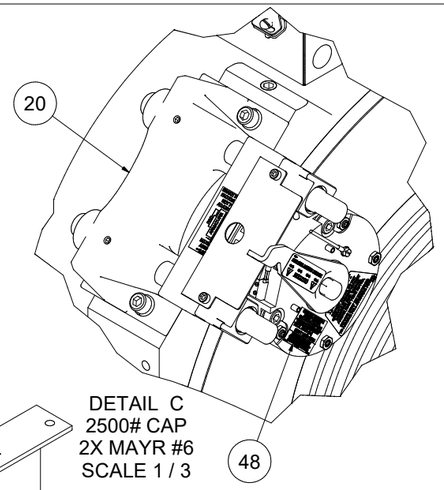

DETAIL C
2500# CAP
2X MAYR #6
SCALE 1 / 3

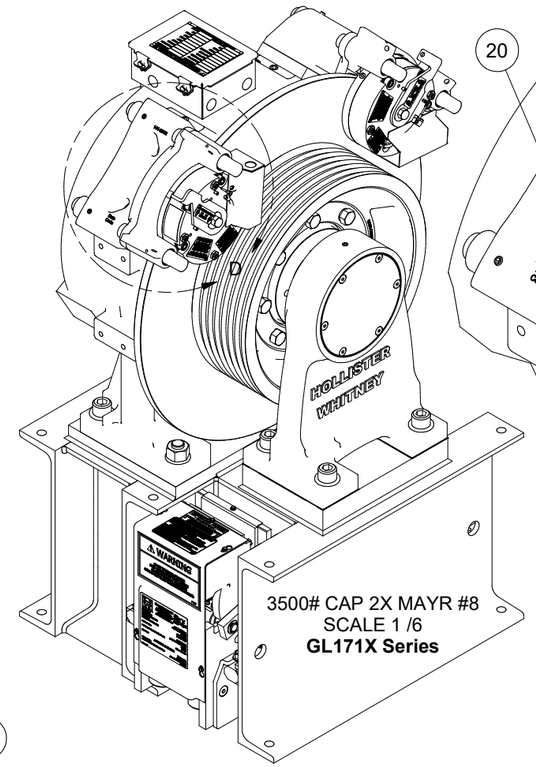

3500# CAP 2X MAYR #8
SCALE 1 /6
GL171X Series

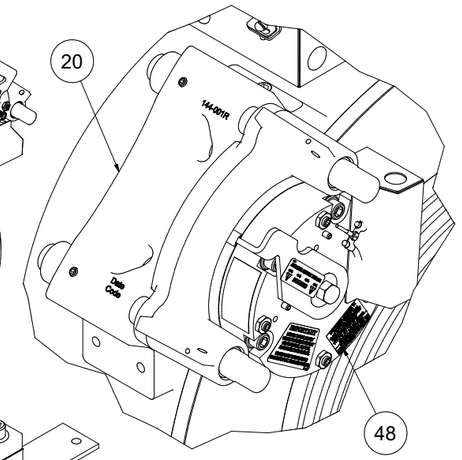

DETAIL D
3500# CAP
2X MAYR #8
SCALE 1 / 3

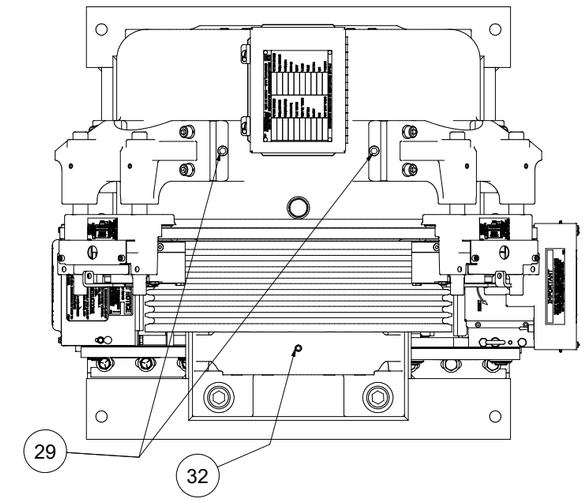

MACHINE MAY REQUIRE TWO (2) PRIMARY SERVICE BRAKES DEPENDING ON DUTY (SEE DUTY CHART FOLLOWING PAGES) AND ONE ROPE GRIPPER FOR EMERGENCY SERVICE. ROPE GRIPPER (NOT INCLUDED) SHOWN. LEFT SIDE AND RIGHT SIDE SIMILAR.
BOLT-DOWN HARDWARE AND MOUNTING ANGLES INCLUDED.

- SEE PAGE 2 FOR PARTS LIST AND RATINGS
- SEE PAGE 3 FOR OVERALL DIMENSIONS

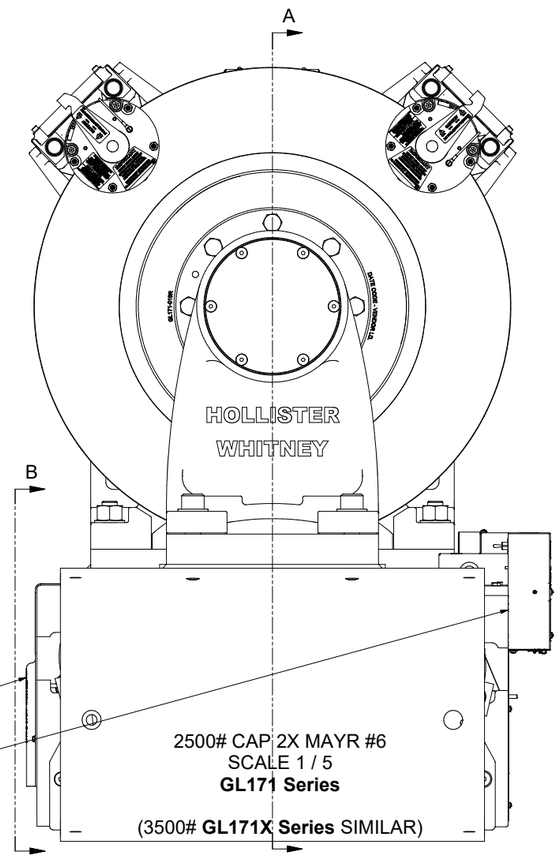

2500# CAP 2X MAYR #6
SCALE 1 / 5
GL171 Series

(3500# **GL171X Series** SIMILAR)

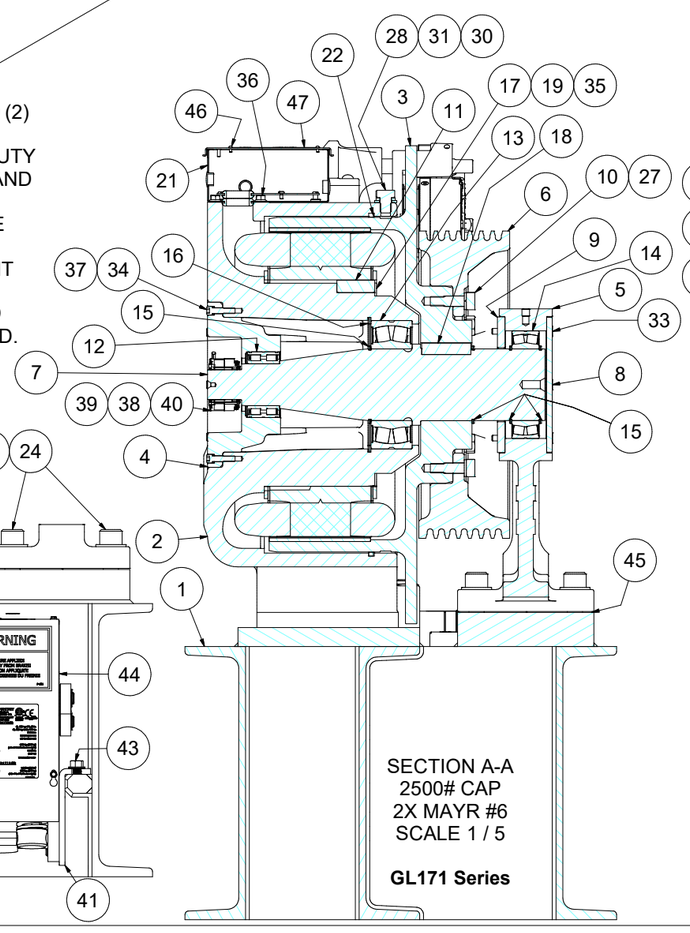

SECTION A-A
2500# CAP
2X MAYR #6
SCALE 1 / 5

GL171 Series

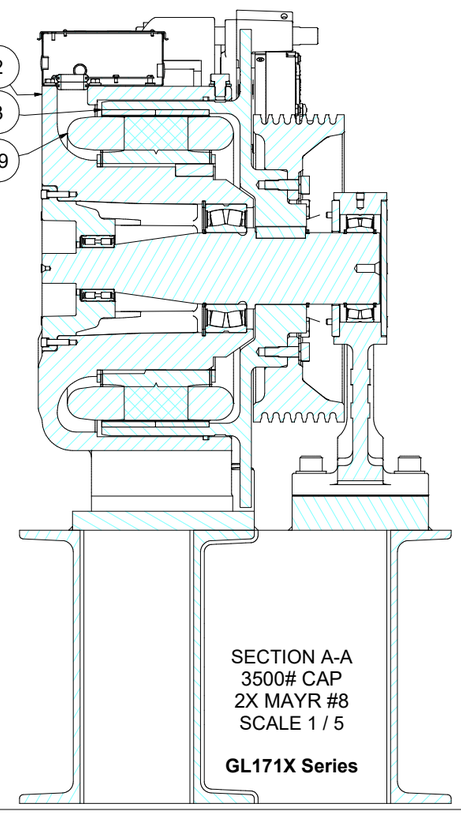

SECTION A-A
3500# CAP
2X MAYR #8
SCALE 1 / 5

GL171X Series

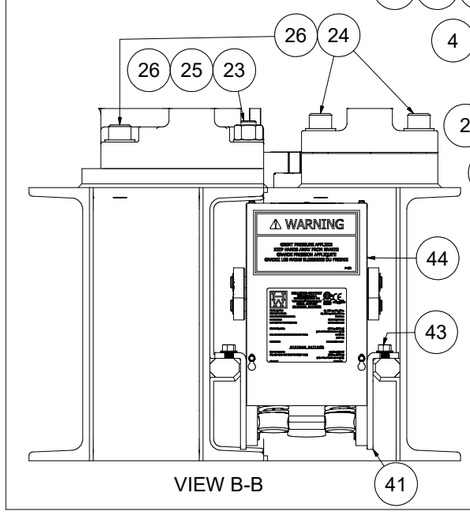

VIEW B-B

WEIGHT: 2825.0 lbmass

			L	ADD 3500# CAPACITY MACHINE w/BRAKES, ROTOR, HOUSING, WIDE 20" WHEEL, 622L OPTION, REDRAW, PUR #1712	LTL 12/8/22

HOLLISTER-WHITNEY
ELEVATOR CO. LLC

TITLE: GEARLESS MACHINE W/622

THIS DRAWING IS SUPPLIED AS A REPRESENTATION OF THE EQUIPMENT HOLLISTER-WHITNEY ELEVATOR CO. LLC ("MANUFACTURER") HAS AGREED TO SUPPLY. SLIGHT ADJUSTMENTS MAY OCCUR DURING MANUFACTURING AND INSTALLATION. ANY MODIFICATIONS NOT APPROVED IN WRITING BY MANUFACTURER MAY AFFECT OPERATION, VOIDS ANY WARRANTY AND RELEASES MANUFACTURER OF ALL LIABILITY. THIS DOCUMENT CONTAINS CONFIDENTIAL AND PROPRIETARY INFORMATION THAT CANNOT BE REPRODUCED OR DIVULGED, IN WHOLE OR IN PART, WITHOUT WRITTEN AUTHORIZATION FROM THE MANUFACTURER.

THIRD ANGLE PROJECTION

DRAWN BY	SCALE	MATERIAL	REFERENCE TOL.
LTL	1 / 5	SEE PARTS LIST	ALL DIMENSIONS REFERENCE UNLESS OTHERWISE SPECIFIED
SHEET SIZE D		DATE 9/28/2012	GL171-622 SHEET 1 OF 3

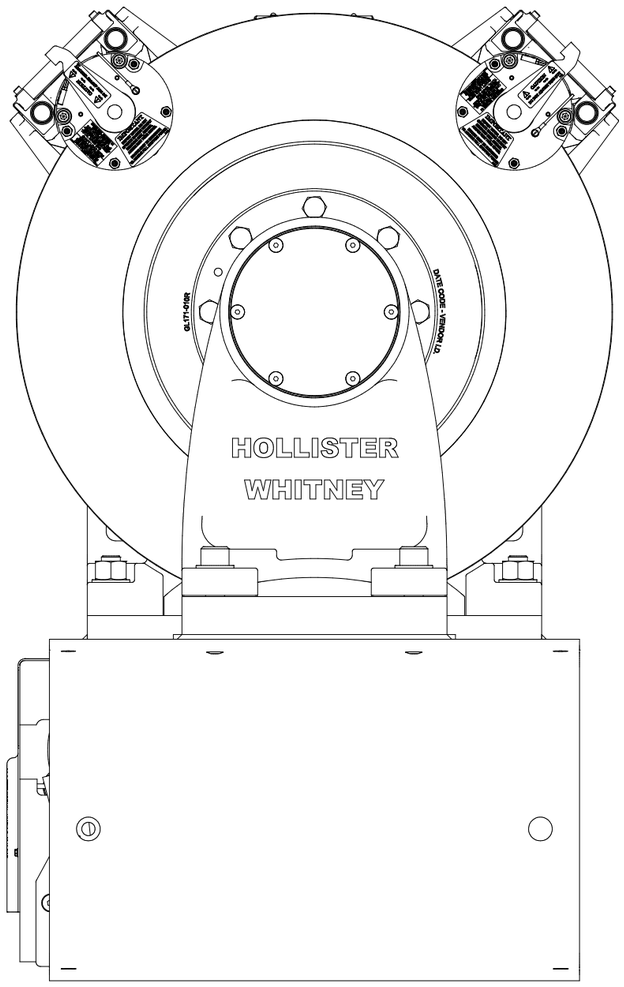

2500# CAP 2X MAYR #6
SCALE 1 / 4
GL171 Series

ITEM	QTY	PART NUMBER	DESCRIPTION
1	1	GL171B-622	BASE FABRICATION - FINISHED
2	1	GL170-001	BASE HOUSING, MOTOR #GL170
		GL180-001	BASE HOUSING, MOTOR #GL181
3	1	GL171-002	ROTOR ASSEMBLY, MOTOR #GL171, to 2500# CAP 50% CB
		GL181-002	ROTOR ASSEMBLY, MOTOR #GL181, to 3500# CAP 50% CB
4	1	GL130-005	BEARING CAP
5	1	GL171-006	OUTBOARD STAND, AC GEARLESS
6	1	GL171-010	20" SHEAVE, 7 x 1/2" ROPE MAX
7	1	GL171-018	MAIN SHAFT
8	1	GL185-019	END CAP
9	1	GL171-020	BEARING END CAP
10	8	GL100-073	BODY BOLT
11	1	GL100-088	KEY - STATOR CORE TO BASE
12	1	GL100-089	Bearing, Sealed Double Row Cylindrical Roller
13	1	GL130-090	SEALED SPHERICAL ROLLER BEARING
14	1	GL185-090	BEARING, SEALED SPHERICAL ROLLER
15	4	GL130-092	RETAINING RING - SHAFT
16	1	GL130-093	RETAINING RING - HOUSING
17	3	GL100-094-1	CLAMP - STATOR ASSEMBLY
18	1	GL171-095	KEY - MAIN SHAFT TO ROTOR
19	1	GL181-100	WINDING ASSEMBLY - 28 POLE, 1:1 Application
		GL171-100	WINDING ASSEMBLY - 28 POLE, 1:1 Application
		GL170-100	WINDING ASSEMBLY - 28 POLE (2:1 IN 1:1 APL), SEE BELOW
20	1	GL130-144	DISC BRAKE (MAYR #8) - THRU 1875# CAP 50% CB
	2	GL100-146	DISC BRAKE (MAYR #6) - 1876# TO 2500# CAP 50% CB
	2	GL130-144	DISC BRAKE (MAYR #8) - 2501# TO 3500# CAP 50% CB
21	1	GL100-159	ELECTRICAL ENCLOSURE, HOFFMAN A806CH - MODIFIED
22	1	GL100-165	FELT DUST SEAL
23	2	1 - 8 UNC x 5	ALL THREAD - GRADE 5
24	6	1 - 8 UNC x 3.5"	SOCKET HEAD CAP SCREW
25	2	1 - 8 UNC NUT	HEAVY HEX NUT
26	8	1" WASHER	SAE WASHER
27	8	M18 LOCK WASHER-DIN 127B	HELICAL SPRING LOCK WASHER - BODY BOLT
28	3	3/4 - 10 UNC x 1.0	HEX HEAD CAP SCREW
29	2	3/4-10 UNC x 0.75	Hexagon Socket Set Screw - Flat Point
30	3	3/4 WASHER	SAE WASHER
31	3	3/4" WASHER	STANDARD LOCK WASHER
32	1	1/2-13 UNC x 0.5	Hexagon Socket Set Screw - Flat Point
33	6	3/8-16 UNC x 4	FLAT HEAD CAP SCREWS
34	8	3/8 - 16 UNC - 1 1/2	Hexagon Socket Head Cap Screw
35	3	3/8 - 16 UNC - 1	Hexagon Socket Head Cap Screw
36	4	3/8-16 UNC x 0.625	Hex Flange Screw - Regular Thread - Inch
37	8	0.375 WASHER	CAP SCREW LOCK WASHER
38	4	#8 WASHER	INT. TOOTH LOCKWASHER
39	4	#8-32 x 1/4"	SOCKET HEAD CAP SCREW
40	1	ENC-113	#81800-61 2048PPR 50mm HEIDENHAIN ENCODER
41	2	622-041-GL	MOUNTING ANGLE, GL171-622 BASE
42	6	1/2 - 13 UNC x 1.25	FLAT HEAD CAP SCREW
43	6	1/2-13 UNC x 1.25	HEX FLANGE HEAD SCREW
44	1	622 OR 622L	NOT INCLUDED, 622 SHOWN FOR CLARITY ONLY
45	AS NEC.	GL171-157-05	OUTBOARD STAND SHIM STOCK - 0.005"
		GL171-157-10	OUTBOARD STAND SHIM - 0.010"
		GL171-157-31	OUTBOARD STAND SHIM STOCK - 0.031"
46	4	#6 U x 0.3125	DRIVE SCREW
47	1	P-173	MOTOR TAG - PMAC GEARLESS MACHINE
48	1 or 2	P-242	TAG, GL171 OR GL181 - BRAKE RATINGS FOR MAYR #8
	2	P-212	TAG, GL171 - BRAKE RATINGS FOR MAYR #6

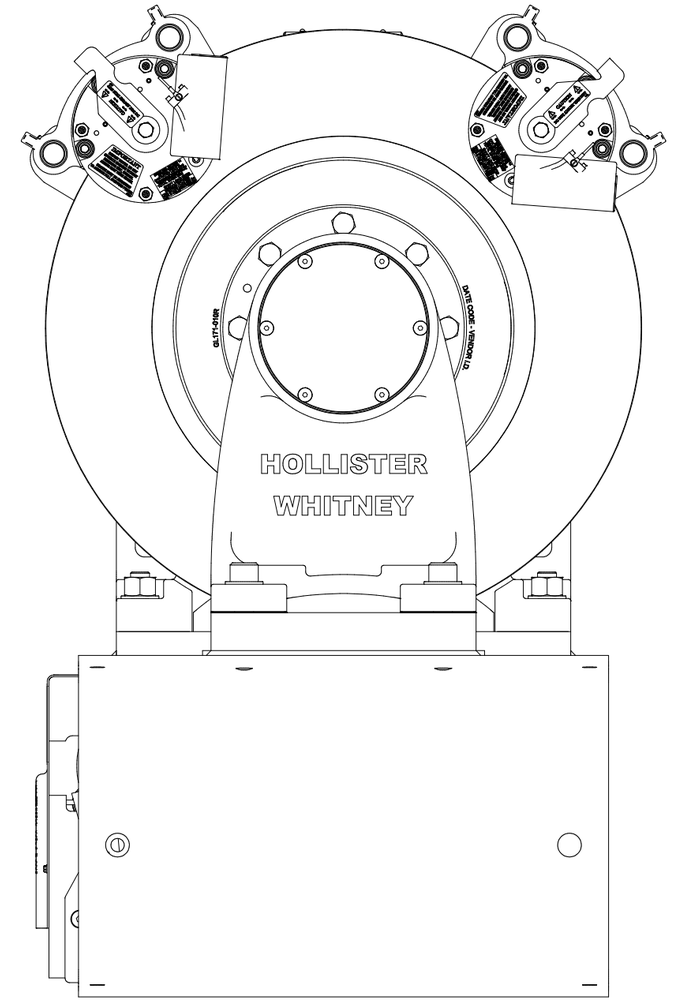

3500# CAP 2X MAYR #8
SCALE 1 / 4
GL171X Series

	TRACTION WHEEL	ROPING	COUNTER BALANCE %					BRAKES REQUIRED
			50	47.5	45	42.5	40	
			CAPACITY (LBS)					
GL171-70	20"	1:1	1875	1775	1700	1625	1550	1X MAYR #8
		2:1	3750	3550	3400	3250	3125	
GL171-40 GL171-20	20"	1:1	2500	2400	2325	2250	2200	2X MAYR #6
		2:1	5000	4825	4675	4525	4400	
GL171X-35	20"	1:1	3500	3325	3175	3025	2900	2X MAYR #8
		2:1	7000	6650	6350	6050	5800	

THESE APPLICATIONS USING WINDINGS DESIGNED FOR 1:1											
						ROPED 1:1			ROPED 2:1		
MACHINE #	WINDING P/N	COIL/WINDING EFFICIENCY (%)	FRAME/MAGNET SIZE (mm)	VOLTAGE (Vac)	MACHINE SPEED (rpm)	CAR SPEED 20" (fpm)	CAR SPEED 15.75" (fpm)	CAR SPEED 15" (fpm)	CAR SPEED 20" (fpm)	CAR SPEED 15.75" (fpm)	CAR SPEED 15" (fpm)
GL171-20L	GL171-170-200	87	170	170	38.2	200	158	150	100	79	75
GL171-20H	GL171-360-200	87	170	360	38.2	200	158	150	100	79	75
GL171X-35H	GL181-380-350	87	170	380	66.8	350	276	263	175	138	131
GL171-40L	GL171-170-400	87	170	170	76.4	400	315	300	200	158	150
THESE APPLICATIONS USING WINDINGS DESIGNED FOR 2:1											
						ROPED 1:1			ROPED 2:1		
GL171-70L	GL170-170-350	93.9	170	170	178.3	933	735	700	467	368	350
GL171-70H	GL170-360-350	94	170	360	178.3	933	735	700	467	368	350

WEIGHT: 2825.0 lbmass

SEE PAGE 1 FOR REVISIONS

HOLLISTER-WHITNEY
ELEVATOR CO. LLC

TITLE: GEARLESS MACHINE W/622

THIS DRAWING IS SUPPLIED AS A REPRESENTATION OF THE EQUIPMENT HOLLISTER-WHITNEY ELEVATOR CO. LLC ("MANUFACTURER") HAS AGREED TO SUPPLY. SLIGHT ADJUSTMENTS MAY OCCUR DURING MANUFACTURING AND INSTALLATION. ANY MODIFICATIONS NOT APPROVED IN WRITING BY MANUFACTURER MAY AFFECT OPERATION, VOIDS ANY WARRANTY AND RELEASES MANUFACTURER OF ALL LIABILITY.
THIS DOCUMENT CONTAINS CONFIDENTIAL AND PROPRIETARY INFORMATION THAT CANNOT BE REPRODUCED OR DIVULGED, IN WHOLE OR IN PART, WITHOUT WRITTEN AUTHORIZATION FROM THE MANUFACTURER.

THIRD ANGLE PROJECTION

DRAWN BY	SCALE	MATERIAL	REFERENCE TOL.
LTL	1 / 4	SEE PARTS LIST	ALL DIMENSIONS REFERENCE UNLESS OTHERWISE SPECIFIED
SHEET SIZE D		DATE 9/28/2012	GL171-622

SHEET 2 OF 3

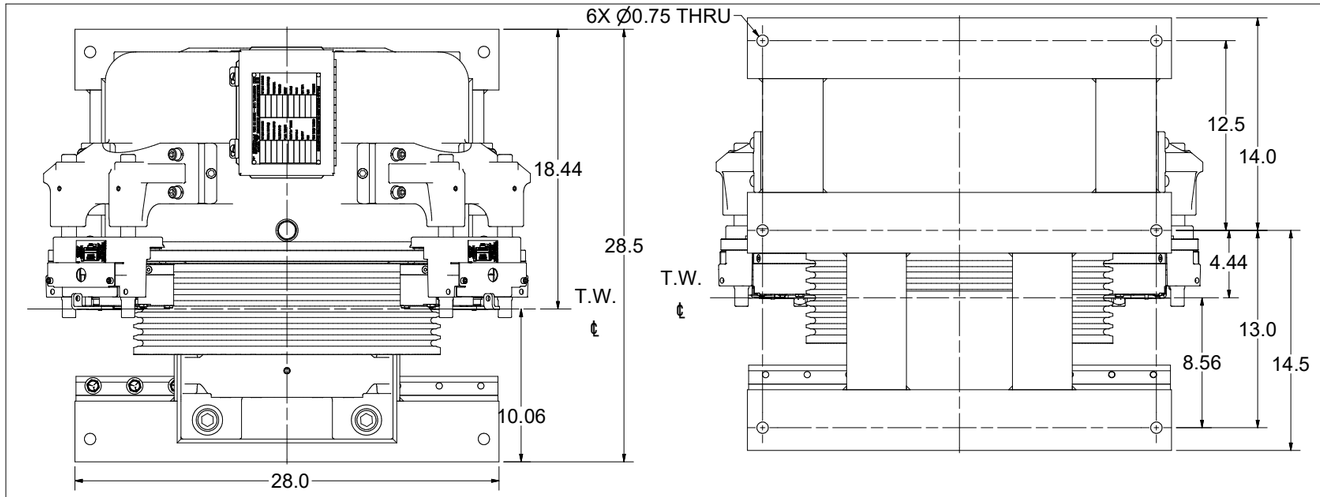

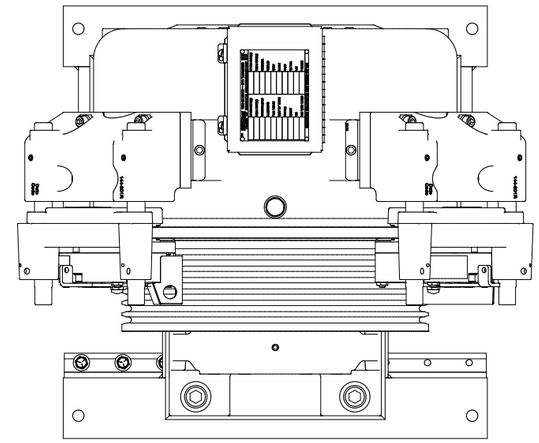

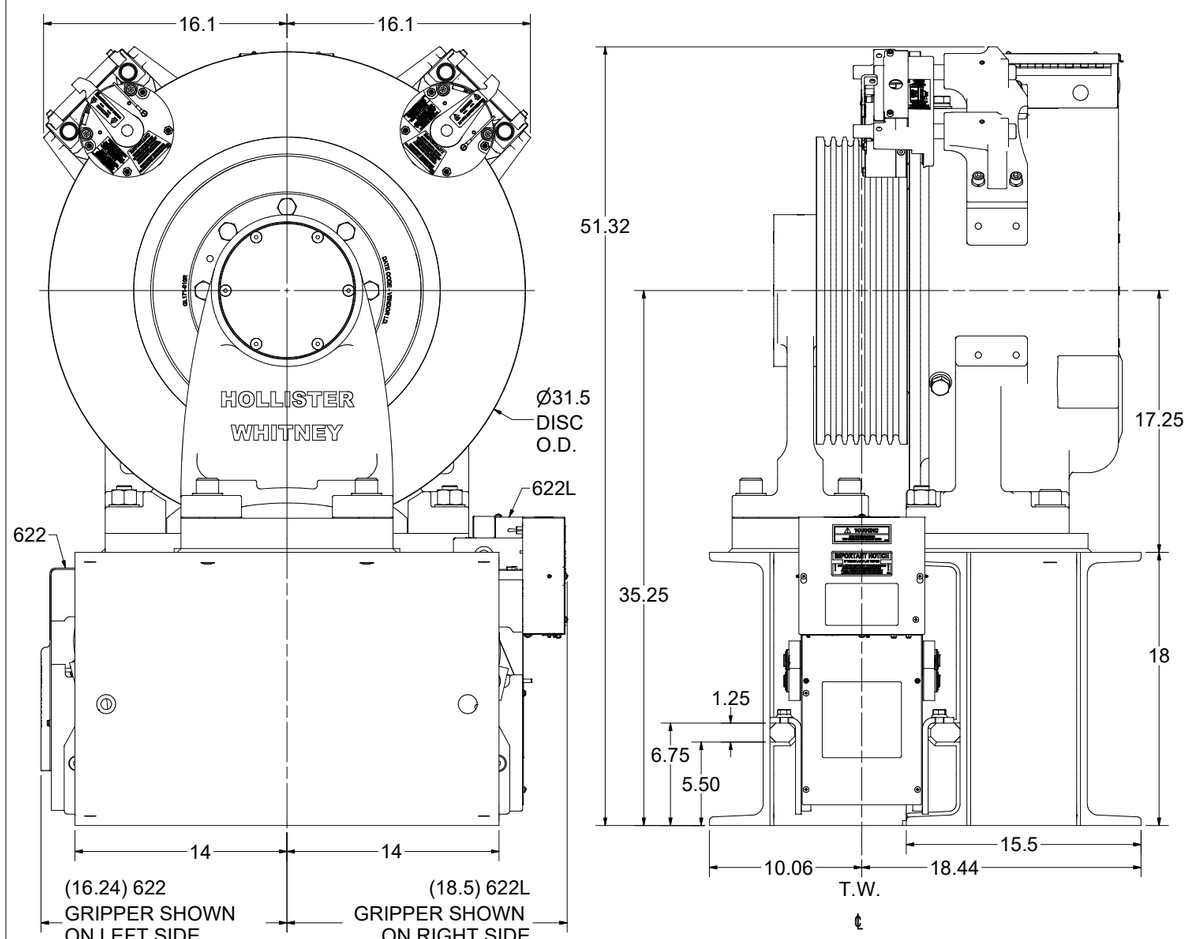

2500# CAP 2X MAYR #6
SCALE 1 / 5
GL171 Series

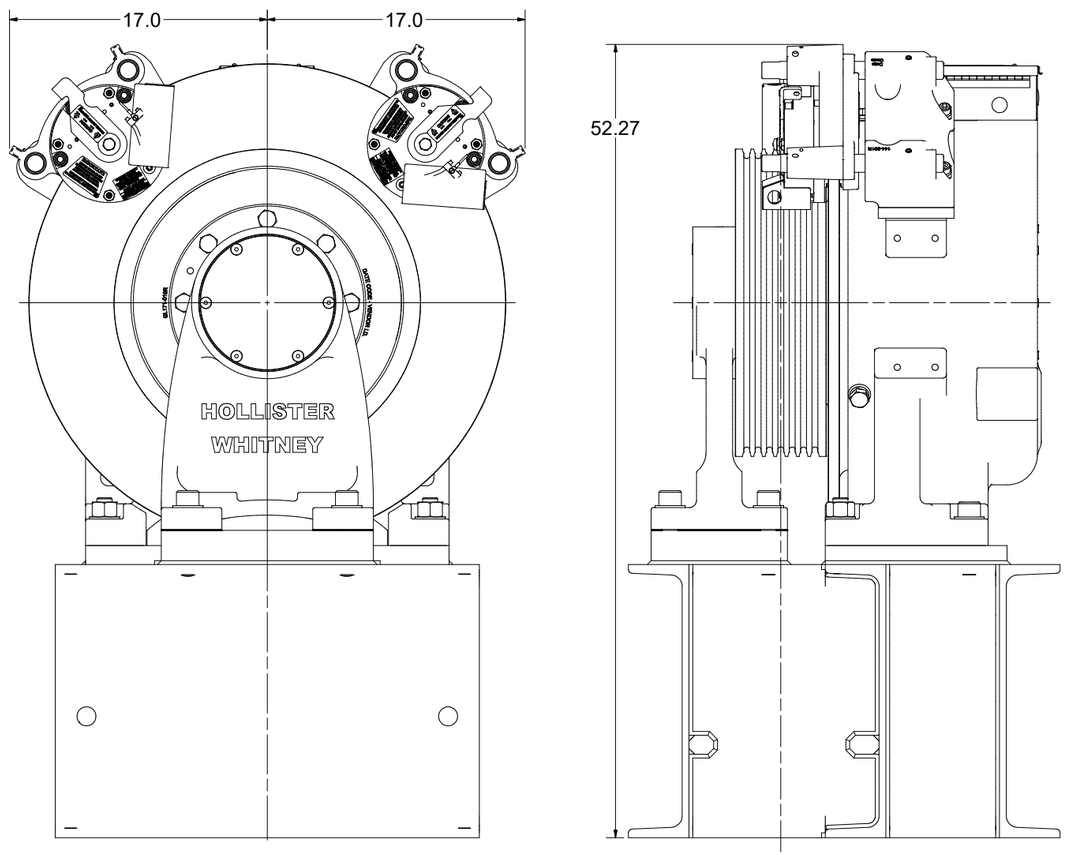

3500# CAP 2X MAYR #8
SCALE 1 /5
GL171X Series

WEIGHT: 2825.0 lbmass

				SEE PAGE 1 FOR REVISIONS
THIS DRAWING IS SUPPLIED AS A REPRESENTATION OF THE EQUIPMENT HOLLISTER-WHITNEY ELEVATOR CO. LLC ("MANUFACTURER") HAS AGREED TO SUPPLY. SLIGHT ADJUSTMENTS MAY OCCUR DURING MANUFACTURING AND INSTALLATION. ANY MODIFICATIONS NOT APPROVED IN WRITING BY MANUFACTURER MAY AFFECT OPERATION, VOIDS ANY WARRANTY AND RELEASES MANUFACTURER OF ALL LIABILITY. THIS DOCUMENT CONTAINS CONFIDENTIAL AND PROPRIETARY INFORMATION THAT CANNOT BE REPRODUCED OR DIVULGED, IN WHOLE OR IN PART, WITHOUT WRITTEN AUTHORIZATION FROM THE MANUFACTURER.				THIRD ANGLE PROJECTION

HOLLISTER-WHITNEY
ELEVATOR CO. LLC

TITLE: GEARLESS MACHINE W/622

DRAWN BY	SCALE	MATERIAL	REFERENCE TOL.
LTL	1 / 5	SEE PARTS LIST	ALL DIMENSIONS REFERENCE UNLESS OTHERWISE SPECIFIED
SHEET SIZE: D		DATE: 9/28/2012	GL171-622 SHEET 3 OF 3

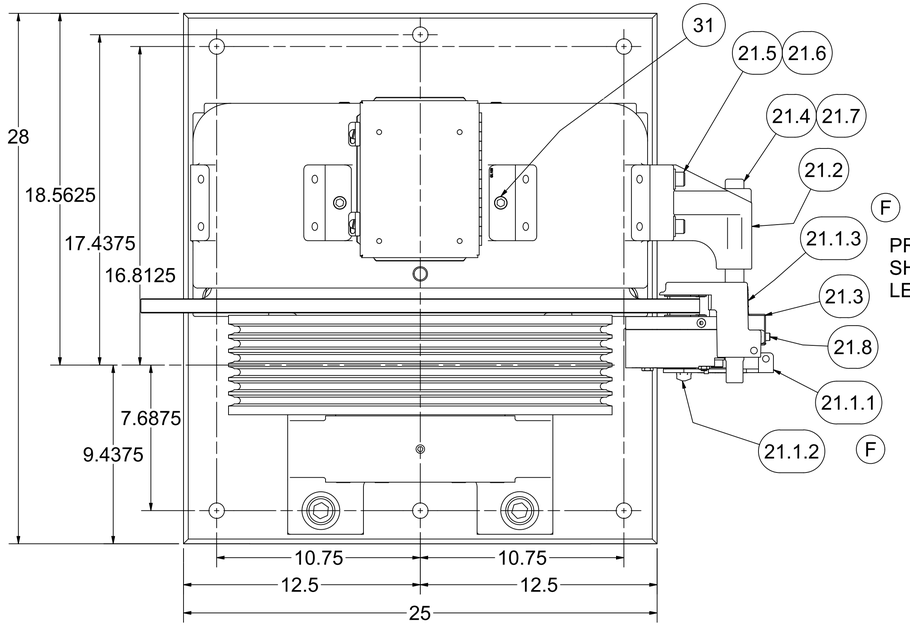

PRIMARY BRAKE
SHOWN RIGHT SIDE,
LEFT SIDE SIMILAR.

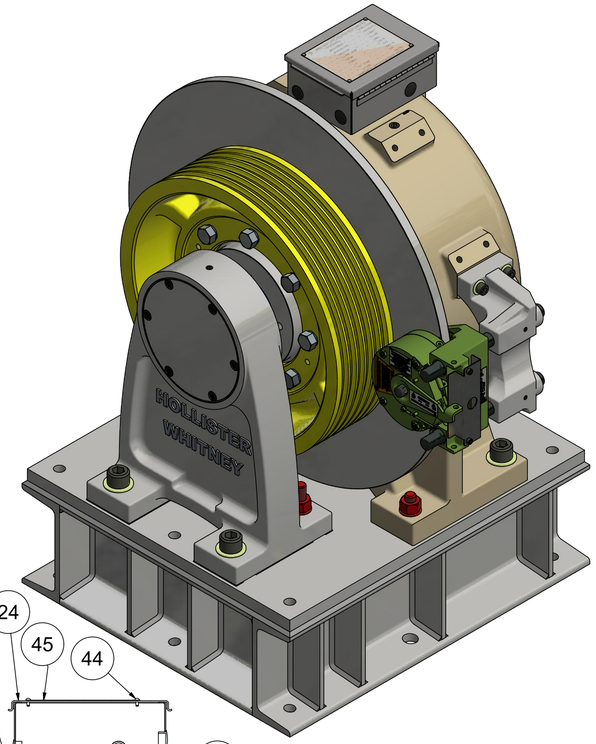

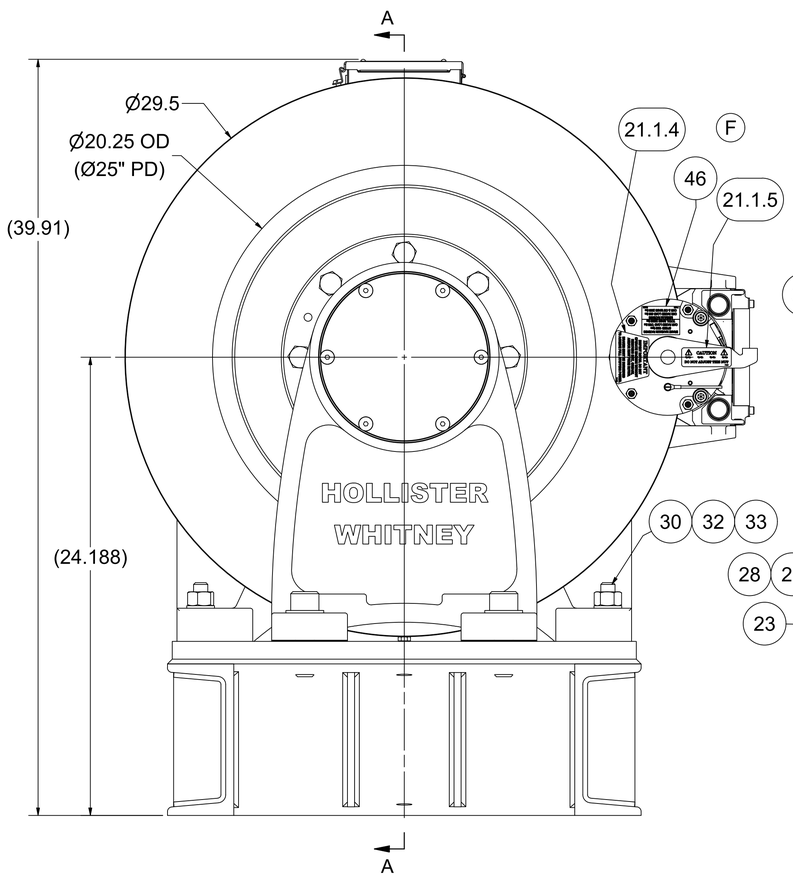

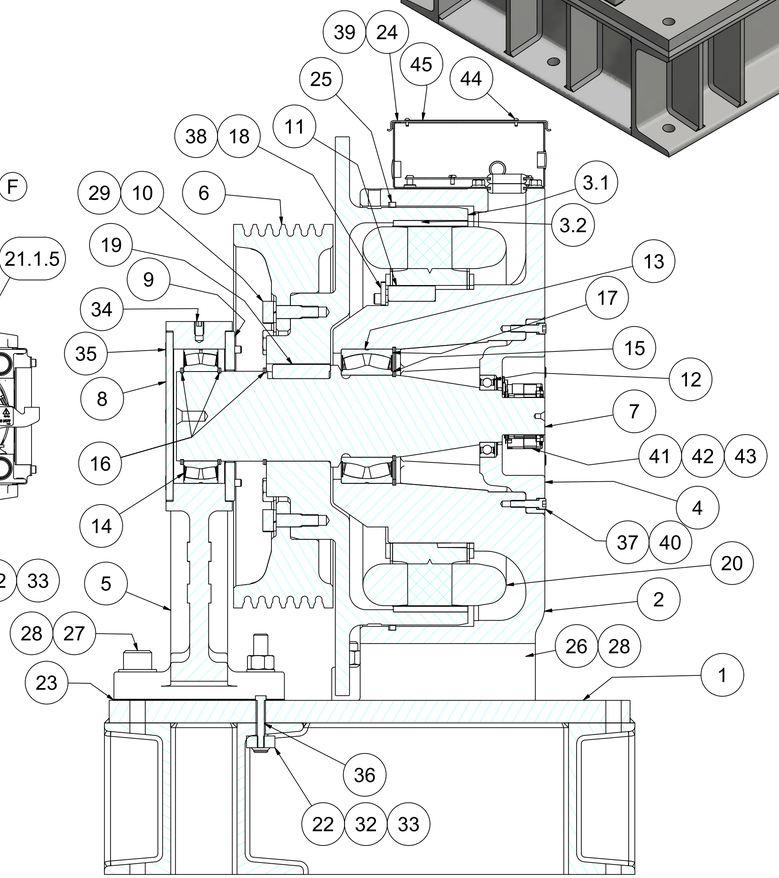

SECTION A-A
SCALE 1 / 4

	ITEM	QTY	PART NUMBER	DESCRIPTION
	1	1	GL101BS-01	FINISHING BASE, BASEMENT SET, GL101
	2	1	GL100-001	BASE HOUSING, MOTOR #GL100
	3	1	GL101-002	ROTOR ASSEMBLY, MOTOR #GL101
	3.1	1	GL101-004	ROTOR
	3.2	28	GL100-099	PERMANENT MAGNET - MOTOR #GL100
	4	1	GL260-005	BEARING CAP
	5	1	GL171-006	OUTBOARD STAND, AC GEARLESS
	6	1	GL100-010	20" SHEAVE, 6 x 1/2" ROPE MAX
	7	1	GL101-018	MAIN SHAFT
	8	1	GL185-019	END CAP
	9	1	GL171-020	BEARING END CAP
	10	8	GL100-073	BODY BOLT
	11	1	GL100-088	KEY - STATOR CORE TO BASE
	12	1	GL185-089	BEARING, SEALED SINGLE ROW DEEP GROOVE BALL
	13	1	GL100-090	Bearings, Sealed Spherical Roller
	14	1	GL185-090	BEARING, SEALED SPHERICAL ROLLER
	15	1	GL100-092	RETAINING RING - SHAFT
	16	3	GL130-092	RETAINING RING - SHAFT
	17	1	GL100-093	RETAINING RING - HOUSING
	18	3	GL100-094-1	CLAMP - STATOR ASSEMBLY
	19	1	GL100-095	KEY - ROTOR TO SHAFT
	20	1	GL100-100	WINDING ASSEMBLY
	21	1	GL100-146	DISC BRAKE (MAYR #6) - MRL
	21.1	1	GL100-146-115S	MAYR #6 BRAKE WITH STANDARD STICKERS
E	21.1.1	1	GL100-146-115	MAYR #6 RSD6/894.510.03S 52V #8275067
	21.1.2	1	142-050	BLACK VINYL CAP
F	21.1.3	1	P-175	TAG, GEARLESS MACHINE BRAKE AIRGAP DATA
	21.1.4	1	P-190	ROTOR INSPECTION & BRAKE BURNISHING STICKER
	21.1.5	1	P-229	CAUTION LABEL - DO NOT ADJUST THIS NUT
	21.2	1	142-001	BRAKE BASE
	21.3	1	146-003	COVER - MAYR #6 ELECTRICAL
	21.4	2	142-012	BRAKE ROD
	21.5	4	1/2-13 UNC x 2	SOCKET HEAD CAP SCREW
	21.6	4	1/2" WASHER	STANDARD WASHER
	21.7	2	3/8-16 UNC x 0.375	SET SCREW
	21.8	2	M6 x 1.00 x 8mm	SHCS - Metric
	22	1	GL171BS-156-5	SHIPPING BOLT
	23	AS NEC.	GL171-157-05	OUTBOARD STAND SHIM STOCK - 0.005"
			GL171-157-10	OUTBOARD STAND SHIM - 0.010"
			GL171-157-31	OUTBOARD STAND SHIM STOCK - 0.031"
	24	1	GL100-159	ELECTRICAL ENCLOSURE, HOFFMAN A806CH - MODIFIED
	25	1	GL100-165	FELT DUST SEAL
	26	2	1 - 8 UNC x 4	SOCKET HEAD CAP SCREW
	27	2	1 - 8 UNC x 3.5	SOCKET HEAD CAP SCREW
	28	4	1" WASHER	SAE WASHER
	29	8	M18 LOCKWASHER - DIN1278	BODY BOLT LOCK WASHER
	30	2	3/4-10 X 5	HEX HEAD BOLT
	31	2	3/4-10 UNCx0.875	HALF DOG SET SCREW
	32	4	3/4 - 10 UNC	HEAVY HEX NUT
	33	6	3/4 WASHER	SAE WASHER
	34	1	1/2-13 UNCx0.75	HALF DOG SET SCREW
	35	6	3/8-16 UNC x 4	FLAT HEAD CAP SCREWS
	36	1	3/8-16 X 2.5"	HEX HEAD BOLT
	37	6	3/8 - 16 UNC x 1.5	SOCKET HEAD CAP SCREW
	38	3	3/8 - 16 UNC x 1	SOCKET HEAD CAP SCREW
	39	4	3/8 - 16 UNC x 0.625	WHIZ BOLT
	40	6	0.375 WASHER	CAP SCREW LOCK WASHER
	41	1	ECN 113 52810061	50mm HEIDENHAIN ENCODER
	42	4	#8-32 x 1/4	SOCKET HEAD CAP SCREW
	43	4	#8 WASHER	INT. TOOTH LOCKWASHER
	44	4	#6 U x 0.3125	DRIVE SCREW
F	45	1	P-173	MOTOR TAG - PMAC GEARLESS MACHINE
	46	1	P-210	TAG, GL101 - BRAKE RATINGS FOR MAYR #6

1:1 APPLICATIONS USING 2:1 WINDINGS

MACHINE #	WINDING P/N	COIL/WINDING EFFICIENCY (%)	FRAME/MAGNET SIZE (mm)	VOLTAGE (Vac)	MACHINE SPEED (rpm)	CAR SPEED 20" (fpm)
GL101-15L	GL100-170-150	87.2	100	170	76.4	400
GL101-15H	GL100-360-150	87.1	100	360	76.4	400
GL101-20L	GL100-170-200	89.2	100	170	101.9	533
GL101-20H	GL100-360-200	89.3	100	360	101.9	533

WEIGHT: 2010.4 lbmass

		F	UPDATE BRAKE PARTS LIST & TAGS, PUR #1260	LTL 12/19/19
		E	MAYR #8275067 WAS #8211863, PUR #1244	LTL 12/9/19

HOLLISTER-WHITNEY
ELEVATOR CO. LLC

TITLE: GEARLESS MACHINE, 1100# @ 50% CB, 1000# @ 45% CB, 900# @ 40% CB

THIS DRAWING IS SUPPLIED AS A REPRESENTATION OF THE EQUIPMENT HOLLISTER-WHITNEY ELEVATOR CO. LLC ("MANUFACTURER") HAS AGREED TO SUPPLY. SLIGHT ADJUSTMENTS MAY OCCUR DURING MANUFACTURING AND INSTALLATION. ANY MODIFICATIONS NOT APPROVED IN WRITING BY MANUFACTURER MAY AFFECT OPERATION, VOIDS ANY WARRANTY AND RELEASES MANUFACTURER OF ALL LIABILITY.
THIS DOCUMENT CONTAINS CONFIDENTIAL AND PROPRIETARY INFORMATION THAT CANNOT BE REPRODUCED OR DIVULGED, IN WHOLE OR IN PART, WITHOUT WRITTEN AUTHORIZATION FROM THE MANUFACTURER.

THIRD ANGLE PROJECTION

DRAWN BY	SCALE	MATERIAL	REFERENCE TOL.
LTL	1 / 4	SEE PARTS LIST	ALL DIMENSIONS REFERENCE UNLESS OTHERWISE SPECIFIED
SHEET SIZE: D		DATE: 5/21/2014	GL101BS

SHEET 1 OF 3

	PARTS LIST				
	ITEM	QTY	PART NUMBER	DESCRIPTION	MASS
	1	1	GL101BS	GEARLESS MACHINE, 1100# @ 50% CB, 1000# @ 45% CB, 900# @ 40% CB	2003.296 lbmass
	2	1	GL101BS-156	FOUNDATION PLATE ASSEMBLY - GL101 BASEMENT SET	586.316 lbmass
C	3	6	3/4 -10 UNC x 10.75"	HEX CAP SCREW	1.491 lbmass
	4	6	3/4 WASHER	SAE WASHER	0.045 lbmass

SUPPLIED FOUNDATION PLATE FOR NEW-POUR

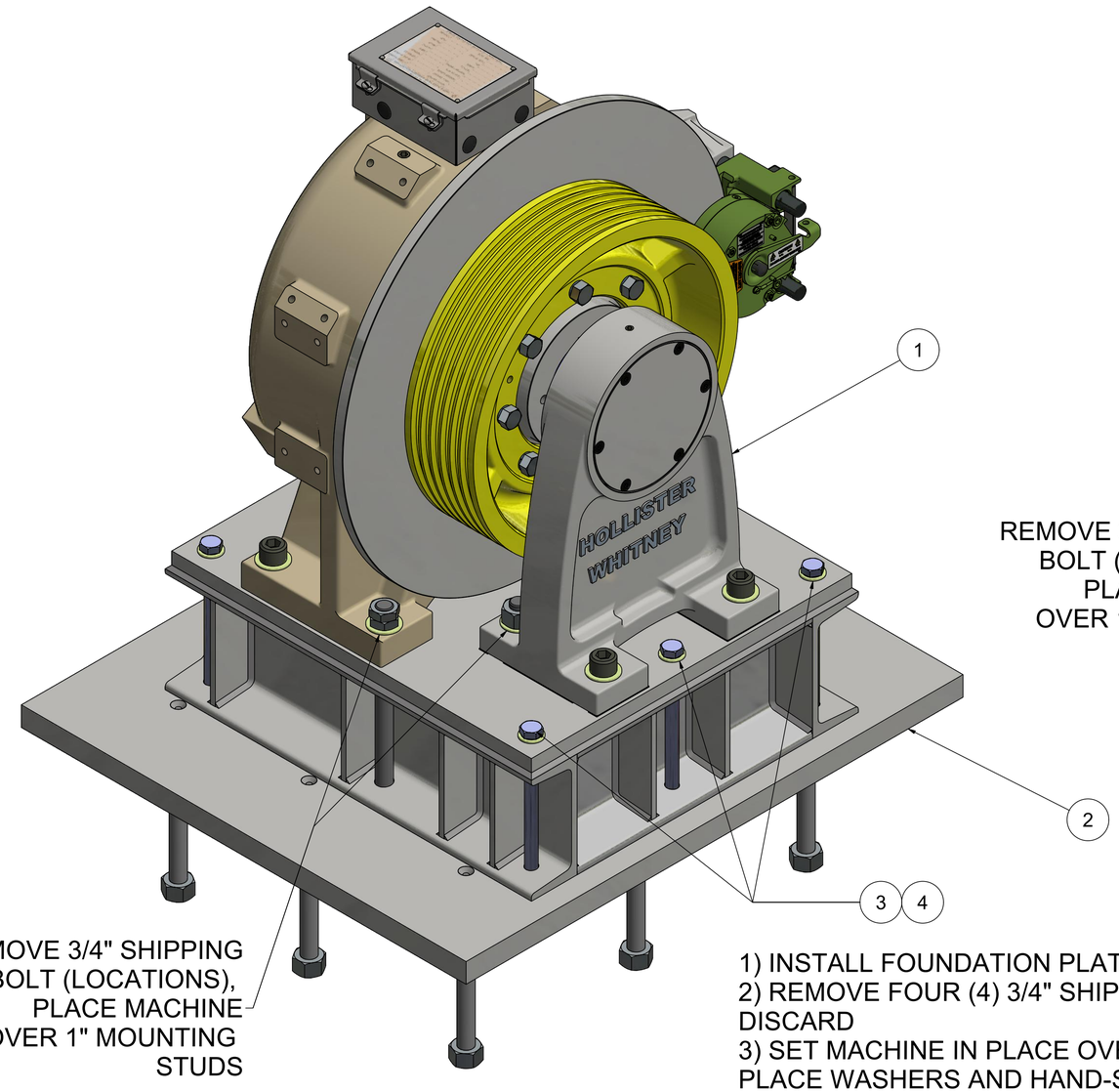

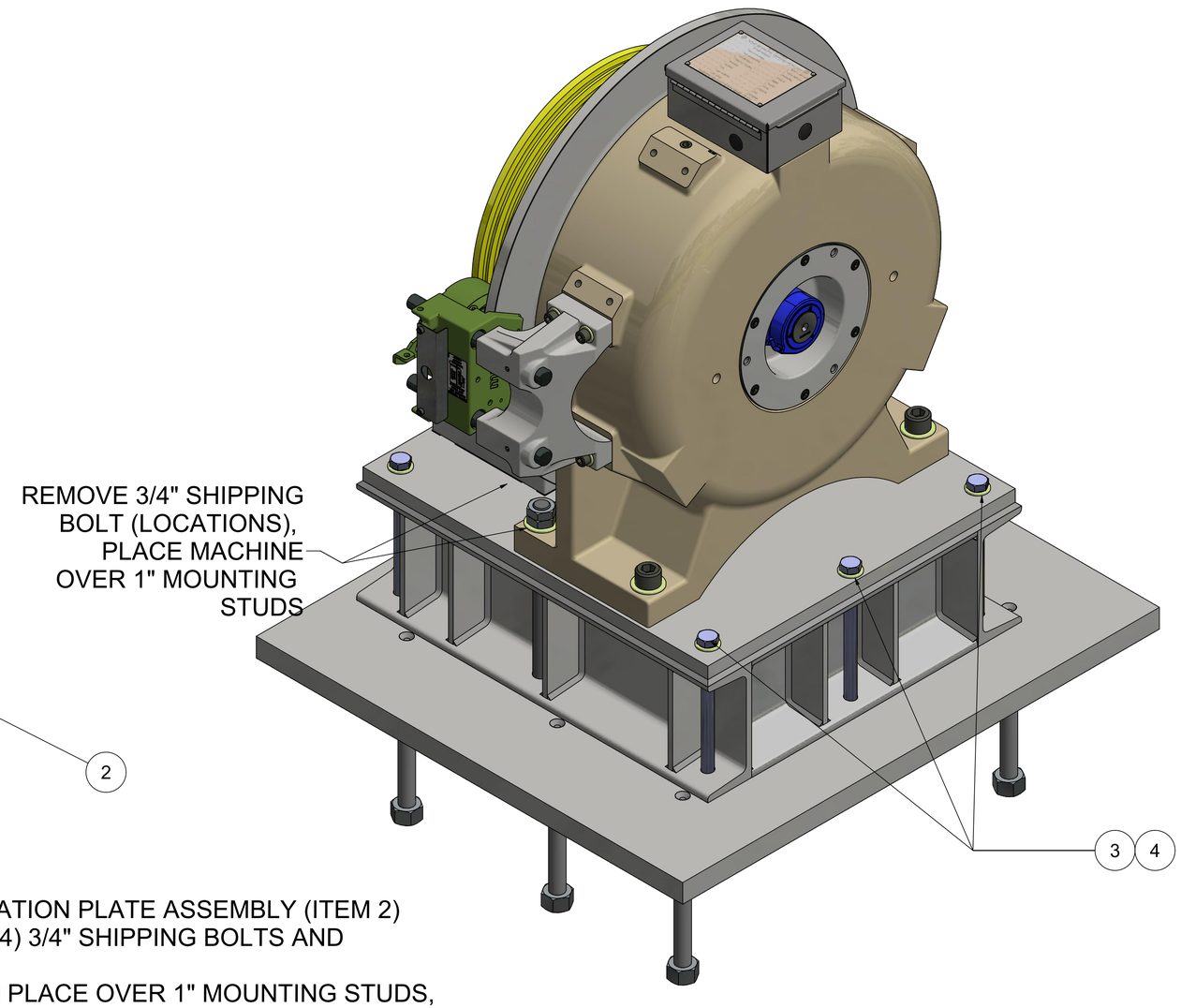

1) INSTALL FOUNDATION PLATE ASSEMBLY (ITEM 2)
2) REMOVE FOUR (4) 3/4" SHIPPING BOLTS AND DISCARD
3) SET MACHINE IN PLACE OVER 1" MOUNTING STUDS, PLACE WASHERS AND HAND-SNUG 4 HEAVY HEX NUTS ONTO STUDS
4) INSTALL 6X 3/4" GR.5 BOLTS AND WASHERS.
5) TIGHTEN 4X 1" HEAVY HEX NUTS & 6X 3/4" BOLTS TO GRADE 5 STANDARDS (APPROX. 575 ft-lbs FOR 1" & 245 ft-lbs FOR 3/4")

PARTS LIST				
ITEM	QTY	PART NUMBER	DESCRIPTION	MASS
1	1	GL101BS	GEARLESS MACHINE, 1100# @ 50% CB, 1000# @ 45% CB, 900# @ 40% CB	2003.296 lbmass
2	1	GL101BS-156A	FOUNDATION PLATE ASSEMBLY - GL101 BASEMENT SET	560.482 lbmass
3	6	3/4 -10 UNC x 10.75"	HEX CAP SCREW	1.491 lbmass
4	6	3/4 WASHER	SAE WASHER	0.045 lbmass

C

SUPPLIED FOUNDATION PLATE FOR SECURING TO EXISTING STRUCTURE

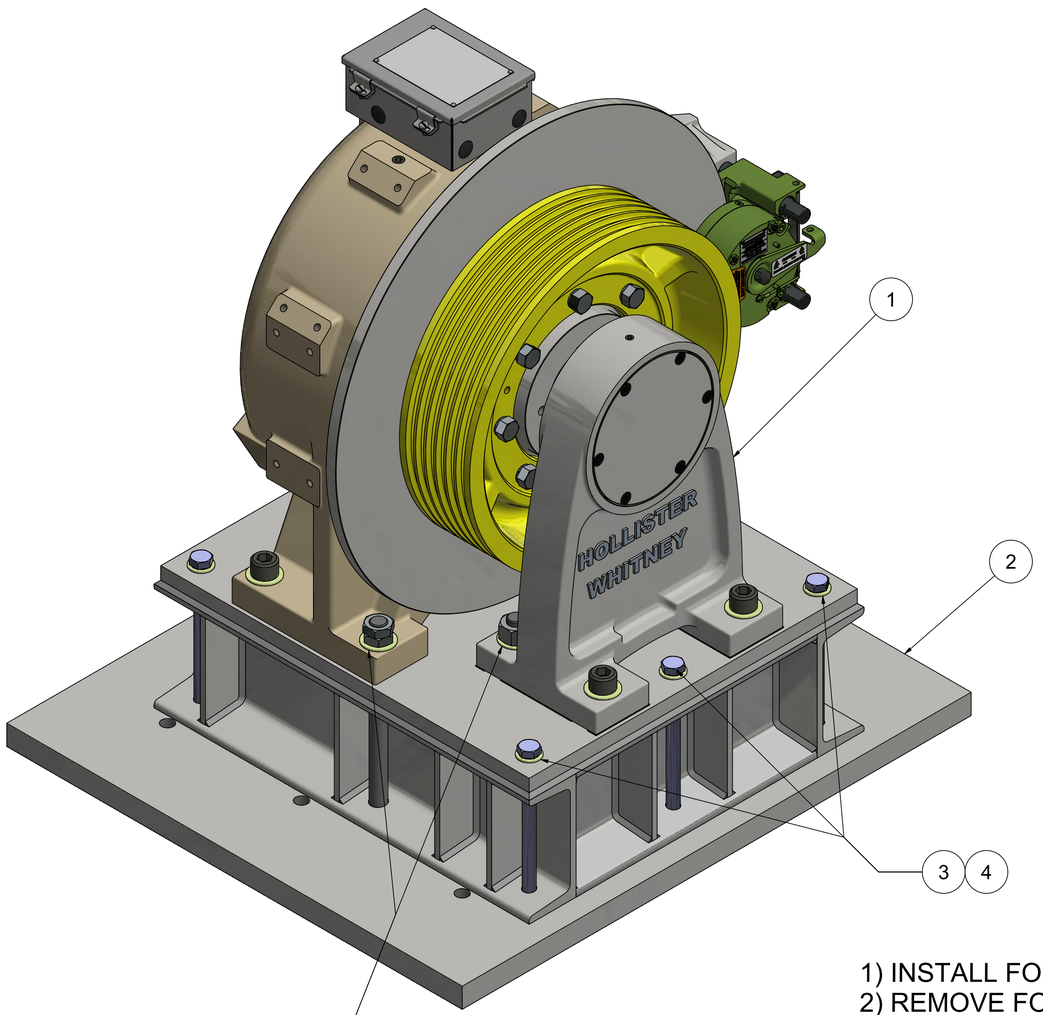

REMOVE 3/4" SHIPPING BOLT (LOCATIONS), PLACE MACHINE OVER 1" MOUNTING STUDS

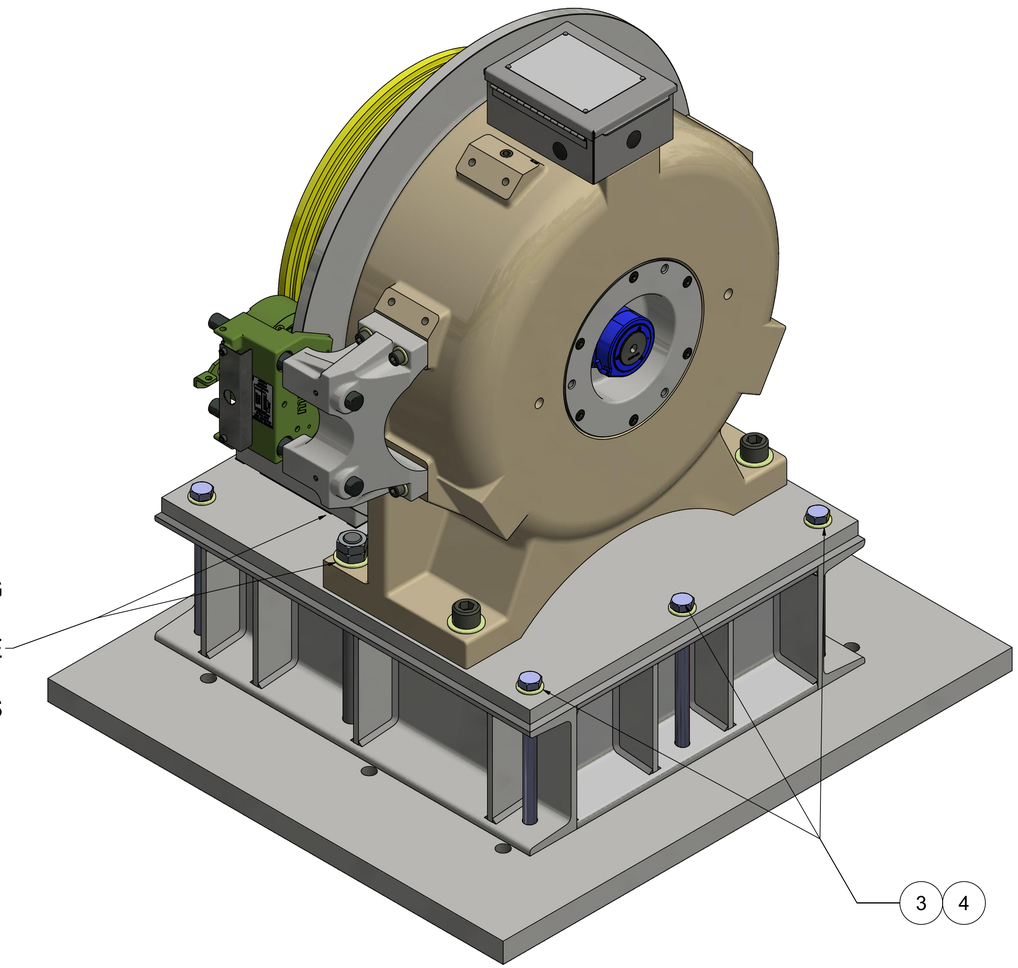

REMOVE 3/4" SHIPPING BOLT (LOCATIONS), PLACE MACHINE OVER 1" MOUNTING STUDS

1) INSTALL FOUNDATION PLATE ASSEMBLY (ITEM 2)
2) REMOVE FOUR (4) 3/4" SHIPPING BOLTS AND DISCARD
3) SET MACHINE IN PLACE OVER 1" MOUNTING STUDS, PLACE WASHERS AND HAND-SNUG 4 HEAVY HEX NUTS ONTO STUDS
4) INSTALL 6X 3/4" GR.5 BOLTS AND WASHERS.
5) TIGHTEN 4X 1" HEAVY HEX NUTS & 6X 3/4" BOLTS TO GRADE 5 STANDARDS (APPROX. 575 ft-lbs FOR 1" & 245 ft-lbs FOR 3/4")

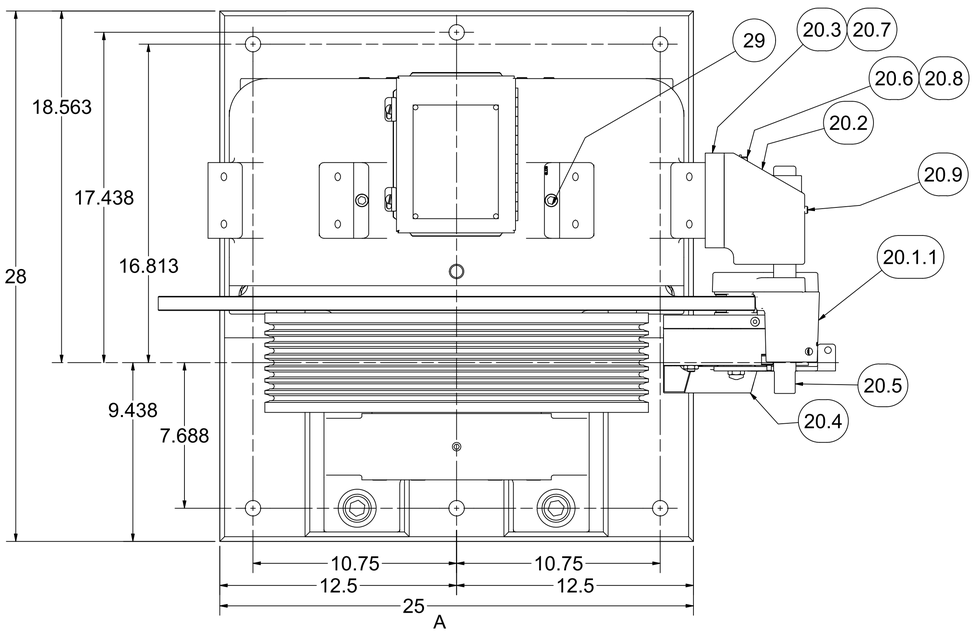

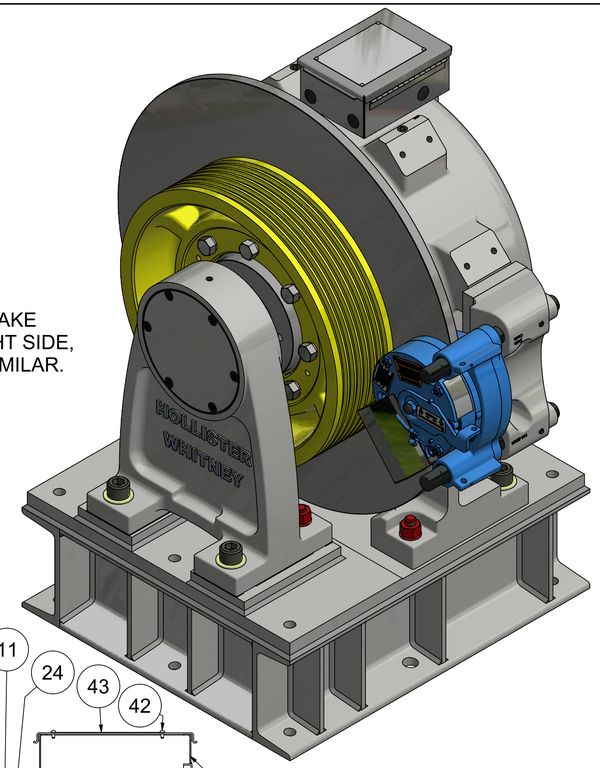

PRIMARY BRAKE
SHOWN RIGHT SIDE,
LEFT SIDE SIMILAR.

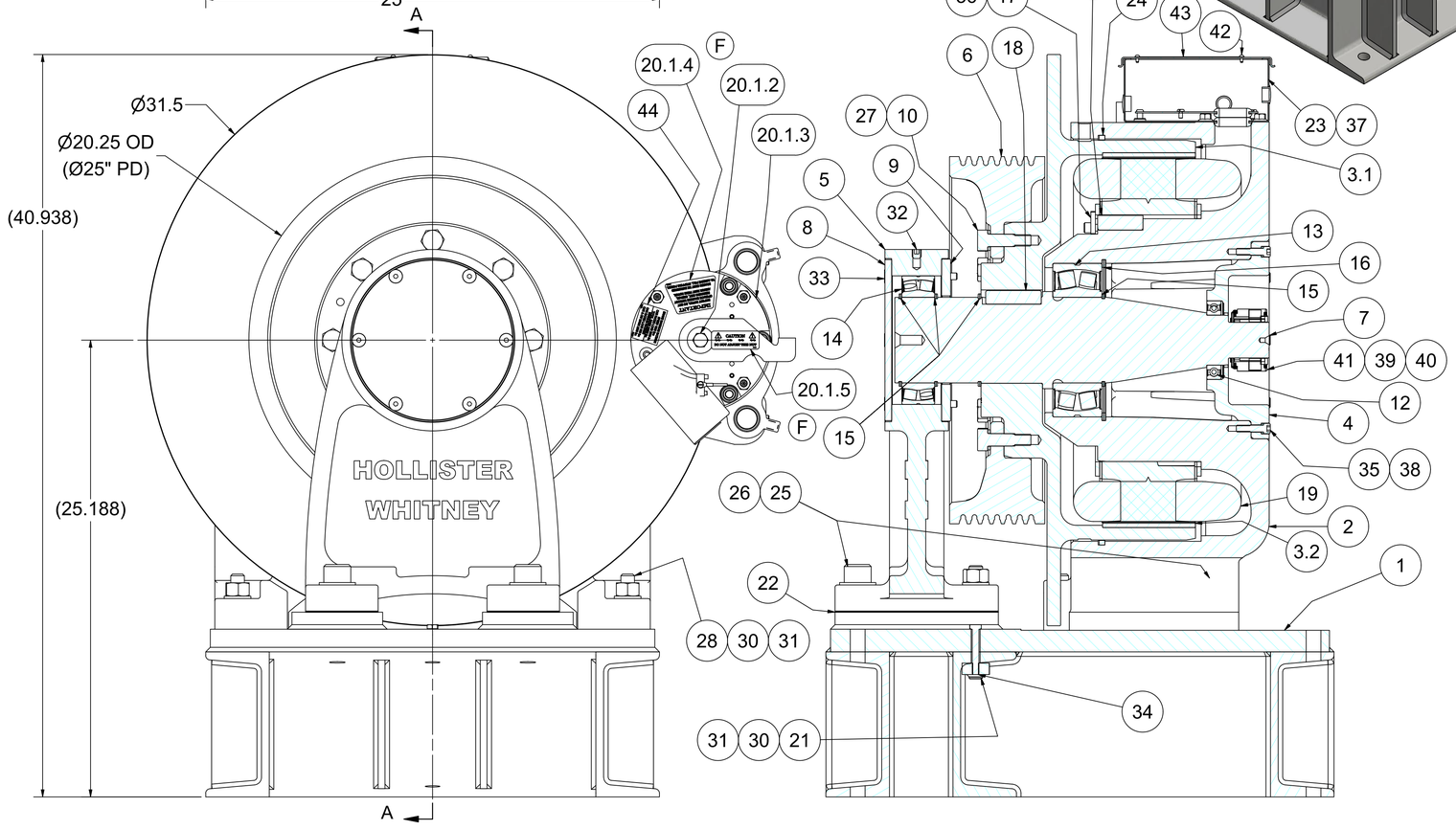

ITEM	QTY	PART NUMBER	DESCRIPTION
1	1	GL171BS-01	FINISHING BASE, BASEMENT SET, GL131 & GL171
2	1	GL130-001	BASE HOUSING, MOTOR #GL130
3	1	GL131-002	ROTOR ASSEMBLY, MOTOR #GL131
3.1	1	GL131-004	ROTOR
3.2	28	GL130-099	PERMANENT MAGNET - MOTOR #GL130
4	1	GL130A-005	BEARING CAP
5	1	GL171-006	OUTBOARD STAND, AC GEARLESS
6	1	GL100-010	20" TRACTION SHEAVE (WIDE)
7	1	GL131-018	MAIN SHAFT
8	1	GL185-019	END CAP
9	1	GL171-020	BEARING END CAP
10	8	GL100-073	BODY BOLT
11	1	GL100-088	KEY - STATOR CORE TO BASE
12	1	GL185-089	BEARING, SEALED SINGLE ROW DEEP GROOVE BALL
13	1	GL130-090	SEALED SPHERICAL ROLLER BEARING
14	1	GL185-090	BEARING, SEALED SPHERICAL ROLLER
15	4	GL130-092	RETAINING RING - SHAFT
16	1	GL130-093	RETAINING RING - HOUSING
17	3	GL100-094-1	CLAMP - STATOR ASSEMBLY
18	1	GL100-095	KEY - ROTOR TO SHAFT
19	1	GL130-100	WINDING ASSEMBLY - 28 POLE
20	1	GL130-144	DISC BRAKE (MAYR #8) - MRL
20.1	1	GL130-144-115S	MAYR #8 BRAKE WITH STANDARD STICKERS
20.1.1	1	GL130-144-115	MAYR #8; RSD8/894.510.03S 52V #8275066
20.1.2	1	142-050	BLACK VINYL CAP
20.1.3	1	P-175	TAG, GEARLESS MACHINE BRAKE AIRGAP DATA
20.1.4	1	P-190	ROTOR INSPECTION & BRAKE BURNISHING STICKER
20.1.5	1	P-229	CAUTION LABEL - DO NOT ADJUST THIS NUT
20.2	1	144-001	BRAKE BASE
20.3	1	144-002	ADAPTOR PLATE - BRAKE BASE
20.4	1	144-003	COVER - MAYR #8 ELECTRICAL
20.5	2	144-012	BRAKE ROD
20.6	4	1/2 - 13 UNC x 1.75	HEX HEAD CAP SCREW
20.7	4	1/2 - 13 UNC x 1.5	Hexagon Socket Flat Countersunk Head Cap Screw
20.8	4	1/2" WASHER	STANDARD WASHER
20.9	2	3/8-16 UNC x 0.625	Hexagon Socket Set Screw - Flat Point
21	1	GL171BS-156-5	SHIPPING BOLT
22	As Nec.	GL171-157-05	OUTBOARD STAND SHIM - 0.005"
		GL171-157-10	OUTBOARD STAND SHIM - 0.010"
		GL171-157-31	OUTBOARD STAND SHIM - 0.031"
23	1	GL100-159	ELECTRICAL ENCLOSURE, HOFFMAN A806CH - MODIFIED
24	1	GL100-165	FELT DUST SEAL
25	4	1 - 8 UNC x 3.5"	SOCKET HEAD CAP SCREW
26	4	1" WASHER	SAE WASHER
27	8	M18 LOCKWASHER-DIN 127B	HELICAL SPRING LOCK WASHER - BODY BOLT
28	2	3/4-10 X 5"	HEX HEAD BOLT
29	2	3/4-10 UNCx0.75	HALF DOG SET SCREW
30	4	3/4 - 10 UNC	HEAVY HEX NUT
31	6	3/4 WASHER	SAE WASHER
32	1	1/2-13 UNCx0.5	HALF DOG SET SCREW
33	6	3/8-16 UNC x 4	FLAT HEAD CAP SCREWS
34	1	3/8-16 X 2.5"	HEX HEAD BOLT
35	8	3/8 - 16 UNC x 1.5	SOCKET HEAD CAP SCREW
36	3	3/8 - 16 UNC x 1	SOCKET HEAD CAP SCREW
37	4	3/8 - 16 UNC x 0.625"	WHIZ BOLT
38	8	0.375 WASHER	CAP SCREW LOCK WASHER
39	4	#8-32 x 1/4"	SOCKET HEAD CAP SCREW
40	4	#8 WASHER	INT. TOOTH LOCKWASHER
41	1	ECN 113 52810061	50mm HEIDENHAIN ENCODER
42	4	#6 U x 0.3125	DRIVE SCREW
43	1	P-173	MOTOR TAG - PMAC GEARLESS MACHINE
44	1	P-211	TAG, GL131 - BRAKE RATINGS FOR MAYR #8

F

F

1:1 APPLICATIONS USING 2:1 WINDINGS						
MACHINE #	WINDING P/N	COIL/WINDING EFFICIENCY (%)	FRAME/MAGNET SIZE (mm)	VOLTAGE (Vac)	MACHINE SPEED (rpm)	CAR SPEED 20" (fpm)
GL131-20L	GL130-170-200	90.6	130	170	101.9	533
GL131-20H	GL130-360-200	90.7	130	360	101.9	533
GL131-35L	GL130-170-350	93.1	130	170	178.3	933
GL131-35H	GL130-360-350	93	130	360	178.3	933

WEIGHT: 2295.3 lbmass

	F	UPDATE BRAKE PARTS LIST & TAGS, PUR #1260	LTL	12/19/19

HOLLISTER-WHITNEY
ELEVATOR CO. LLC

TITLE: GEARLESS MACHINE, 1500 @ 50%, 1350 @ 45%, 1250 @ 40%; 1:1 ROPED

THIS DRAWING IS SUPPLIED AS A REPRESENTATION OF THE EQUIPMENT HOLLISTER-WHITNEY ELEVATOR CO. LLC ("MANUFACTURER") HAS AGREED TO SUPPLY. SLIGHT ADJUSTMENTS MAY OCCUR DURING MANUFACTURING AND INSTALLATION. ANY MODIFICATIONS NOT APPROVED IN WRITING BY MANUFACTURER MAY AFFECT OPERATION, VOIDS ANY WARRANTY AND RELEASES MANUFACTURER OF ALL LIABILITY.
THIS DOCUMENT CONTAINS CONFIDENTIAL AND PROPRIETARY INFORMATION THAT CANNOT BE REPRODUCED OR DIVULGED, IN WHOLE OR IN PART, WITHOUT WRITTEN AUTHORIZATION FROM THE MANUFACTURER.

THIRD ANGLE PROJECTION

DRAWN BY	SCALE	MATERIAL	REFERENCE TOL.
LTL	1 / 4	SEE PARTS LIST	ALL DIMENSIONS REFERENCE UNLESS OTHERWISE SPECIFIED
SHEET SIZE D		DATE 8/28/2015	GL131BS SHEET 1 OF 3

PARTS LIST				
ITEM	QTY	PART NUMBER	DESCRIPTION	MASS
1	1	GL131BS	GEARLESS MACHINE, 1500# @ 50% CB, 1350# @ 45% CB, 1250 @ 40% CB 1:1 ROPED	2288.165 lbmass
2	1	GL171-BS-156	FOUNDATION PLATE ASSEMBLY - GL131 & GL171 BASEMENT SET	586.762 lbmass
C 3	6	3/4 -10 UNC x 10.75"	HEX CAP SCREW	1.491 lbmass
4	6	3/4 WASHER	SAE WASHER	0.045 lbmass

SUPPLIED FOUNDATION PLATE FOR NEW-POUR

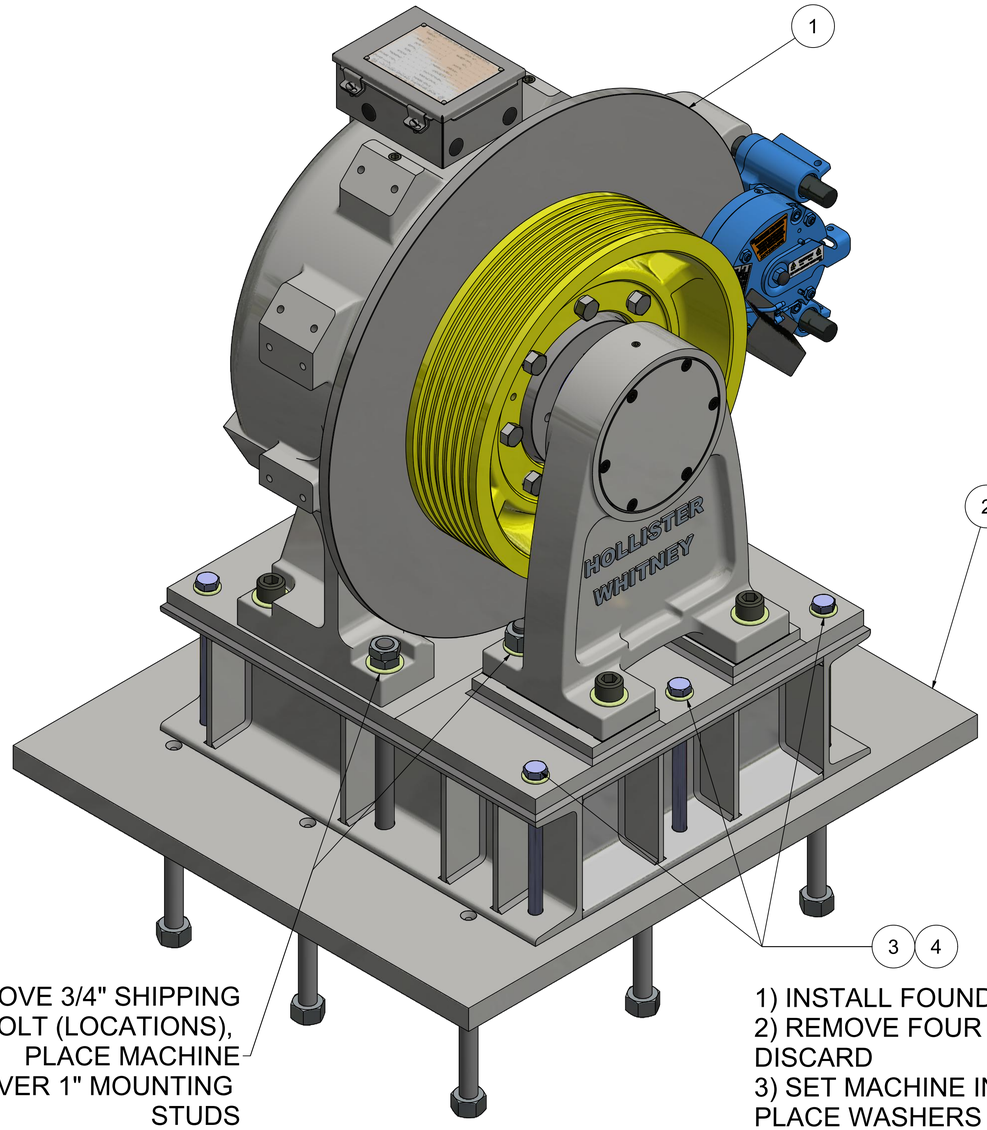

REMOVE 3/4" SHIPPING BOLT (LOCATIONS), PLACE MACHINE OVER 1" MOUNTING STUDS

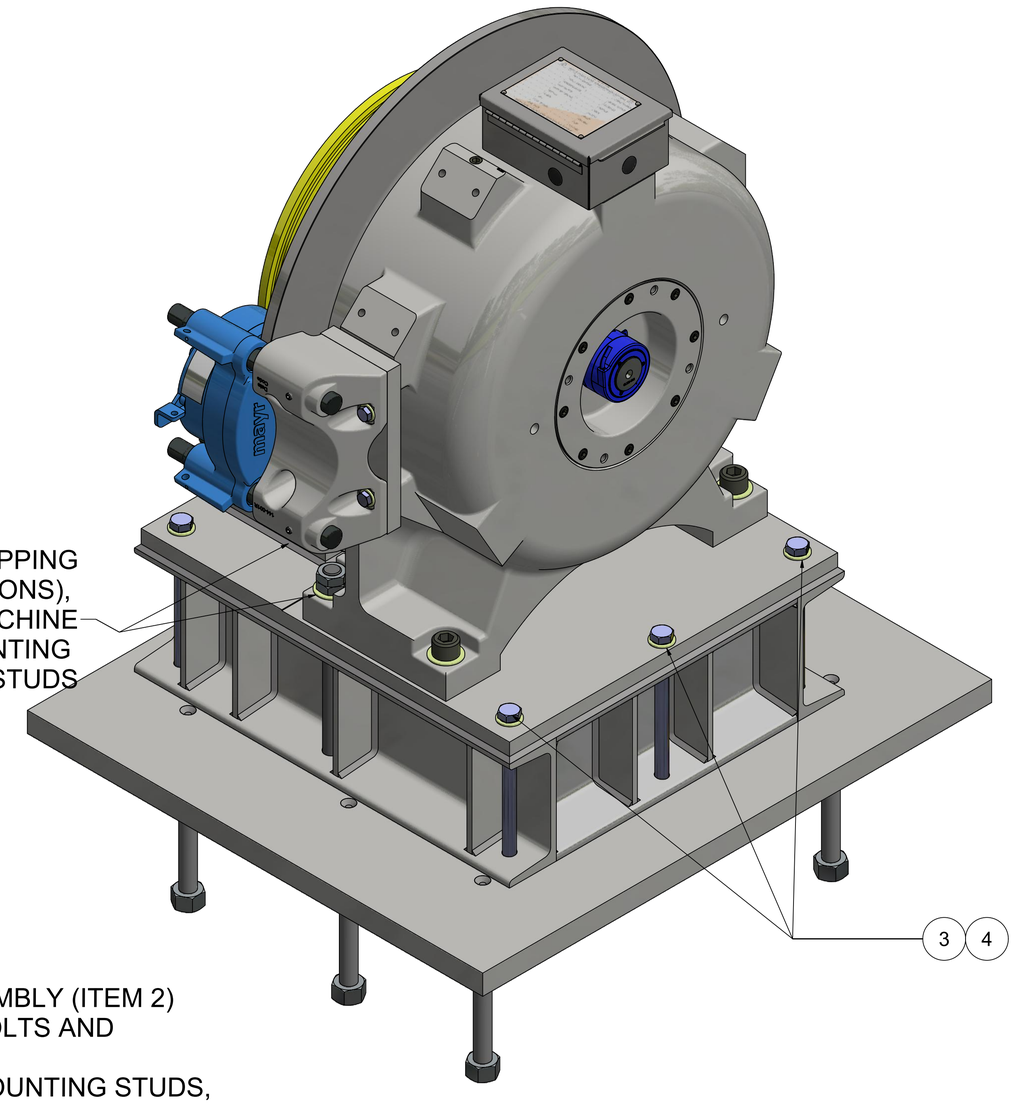

REMOVE 3/4" SHIPPING BOLT (LOCATIONS), PLACE MACHINE OVER 1" MOUNTING STUDS

1) INSTALL FOUNDATION PLATE ASSEMBLY (ITEM 2)
2) REMOVE FOUR (4) 3/4" SHIPPING BOLTS AND DISCARD
3) SET MACHINE IN PLACE OVER 1" MOUNTING STUDS, PLACE WASHERS AND HAND-SNUG 4 HEAVY HEX NUTS ONTO STUDS
4) INSTALL 6X 3/4" GR.5 BOLTS AND WASHERS.
5) TIGHTEN 4X 1" HEAVY HEX NUTS & 6X 3/4" BOLTS TO GRADE 5 STANDARDS (APPROX. 575 ft-lbs FOR 1" & 245 ft-lbs FOR 3/4")

PARTS LIST				
ITEM	QTY	PART NUMBER	DESCRIPTION	MASS
1	1	GL131BS	GEARLESS MACHINE, 1500# @ 50% CB, 1350# @ 45% CB, 1250 @ 40% CB 1:1 ROPED	2288.165 lbmass
2	1	GL171BS-156A	FOUNDATION PLATE ASSEMBLY - GL131 & GL171 BASEMENT SET	560.928 lbmass
C 3	6	3/4 -10 UNC x 10.75"	HEX CAP SCREW	1.491 lbmass
4	6	3/4 WASHER	SAE WASHER	0.045 lbmass

SUPPLIED FOUNDATION PLATE FOR SECURING TO EXISTING STRUCTURE

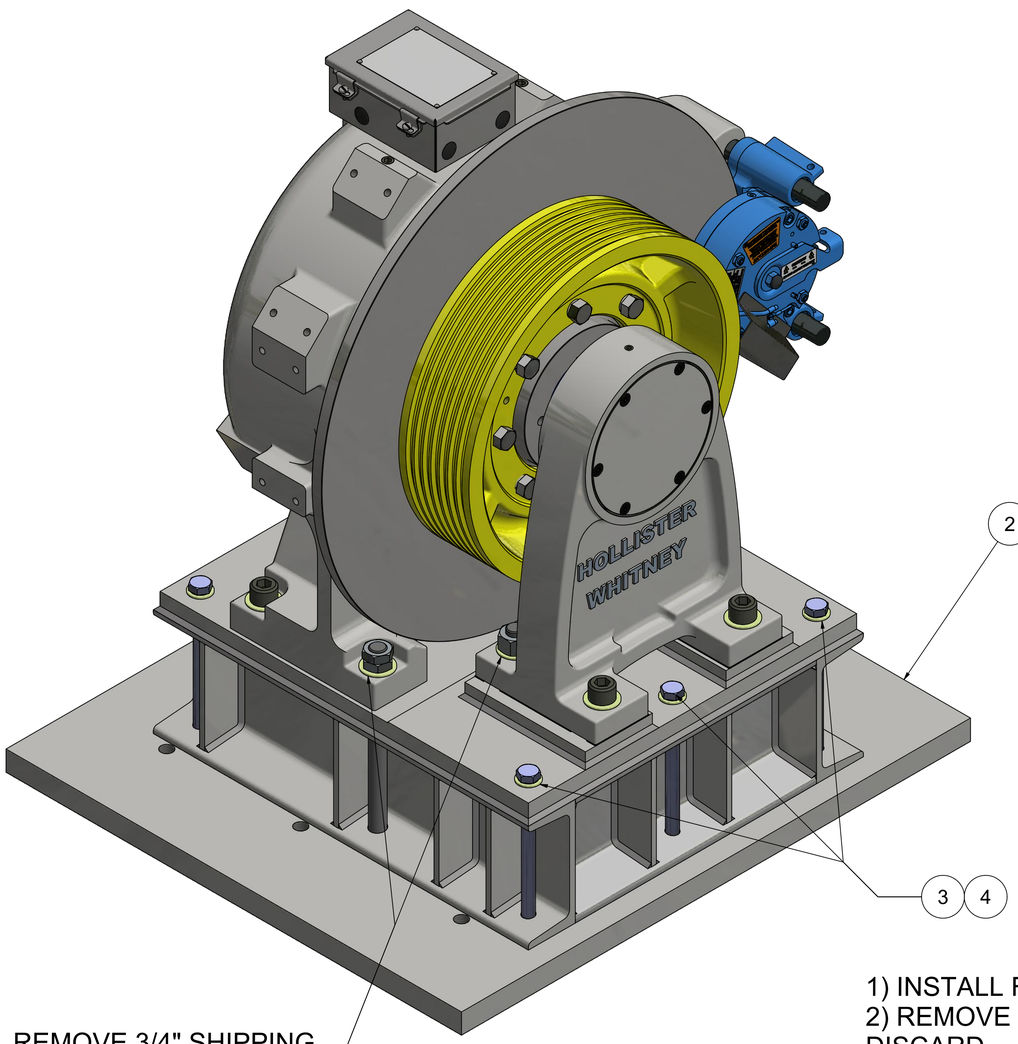

REMOVE 3/4" SHIPPING BOLT (LOCATIONS), PLACE MACHINE OVER 1" MOUNTING STUDS

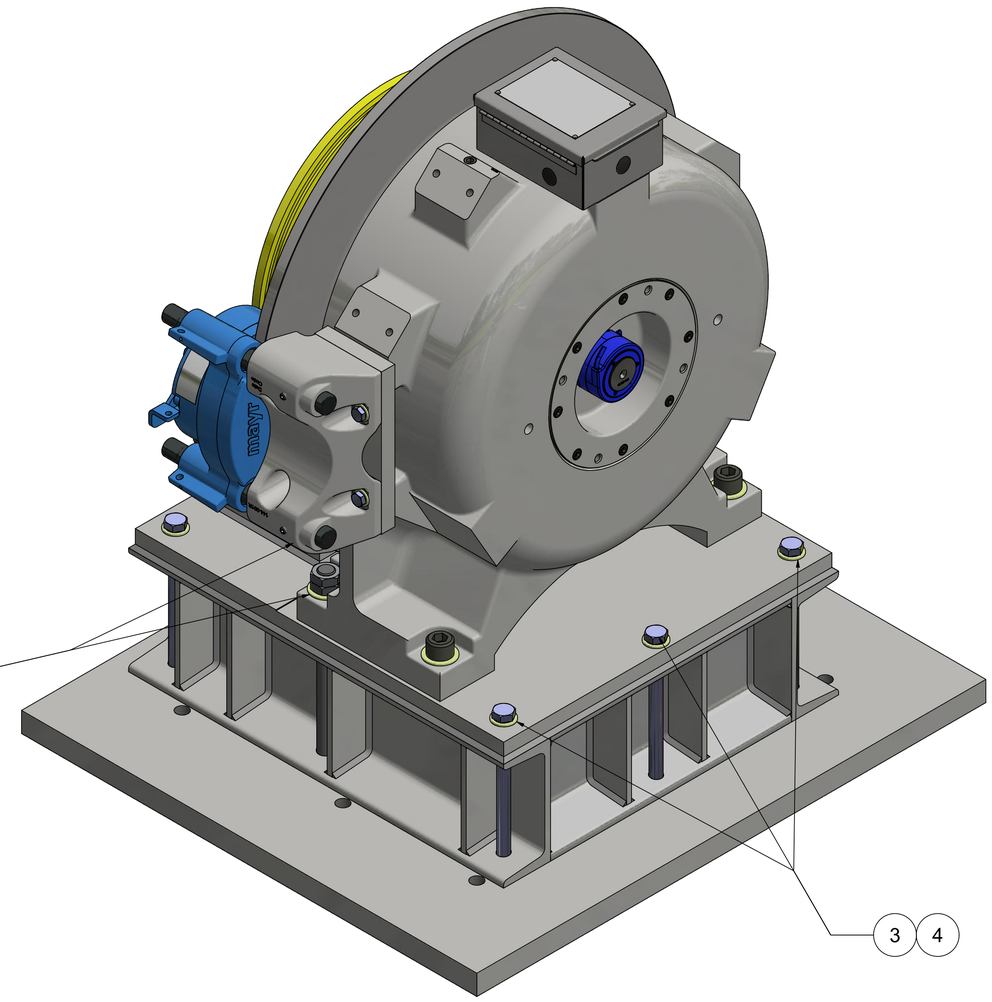

REMOVE 3/4" SHIPPING BOLT (LOCATIONS), PLACE MACHINE OVER 1" MOUNTING STUDS

1) INSTALL FOUNDATION PLATE ASSEMBLY (ITEM 2)
2) REMOVE FOUR (4) 3/4" SHIPPING BOLTS AND DISCARD
3) SET MACHINE IN PLACE OVER 1" MOUNTING STUDS, PLACE WASHERS AND HAND-SNUG 4 HEAVY HEX NUTS ONTO STUDS
4) INSTALL 6X 3/4" GR.5 BOLTS AND WASHERS.
5) TIGHTEN 4X 1" HEAVY HEX NUTS & 6X 3/4" BOLTS TO GRADE 5 STANDARDS (APPROX. 575 ft-lbs FOR 1" & 245 ft-lbs FOR 3/4")

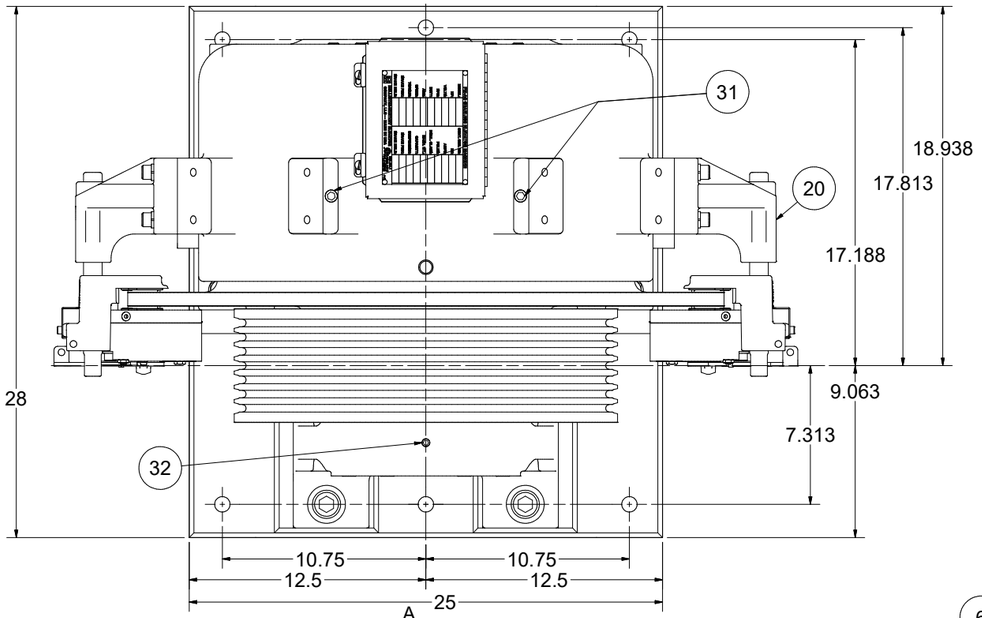

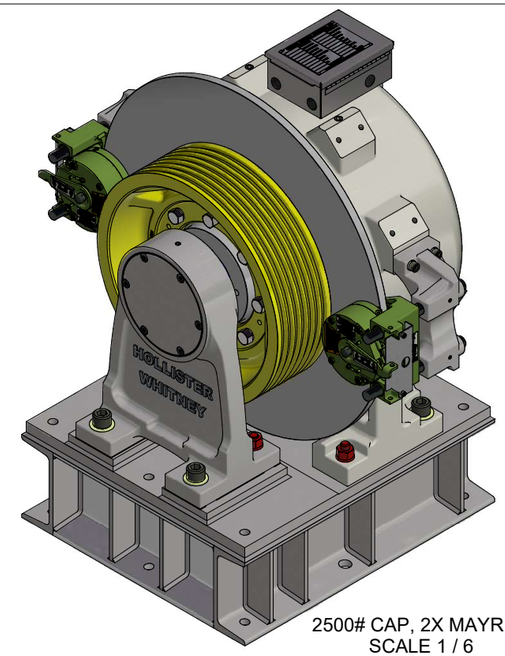

2500# CAP, 2X MAYR #6
SCALE 1 / 6
GL171 Series

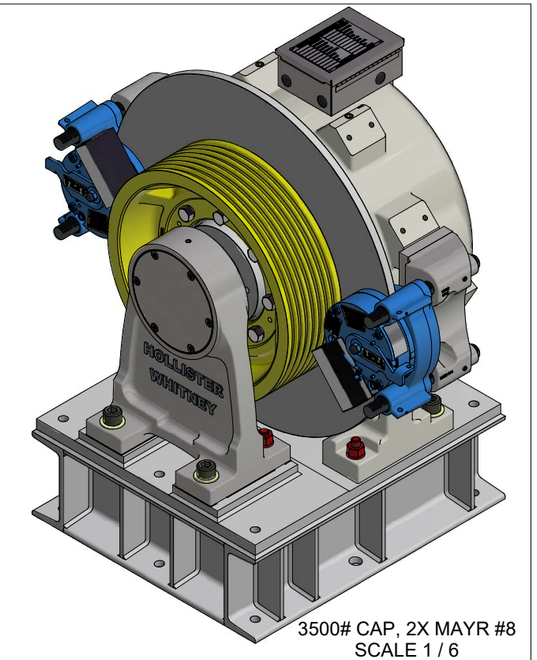

3500# CAP, 2X MAYR #8
SCALE 1 / 6
GL171X Series

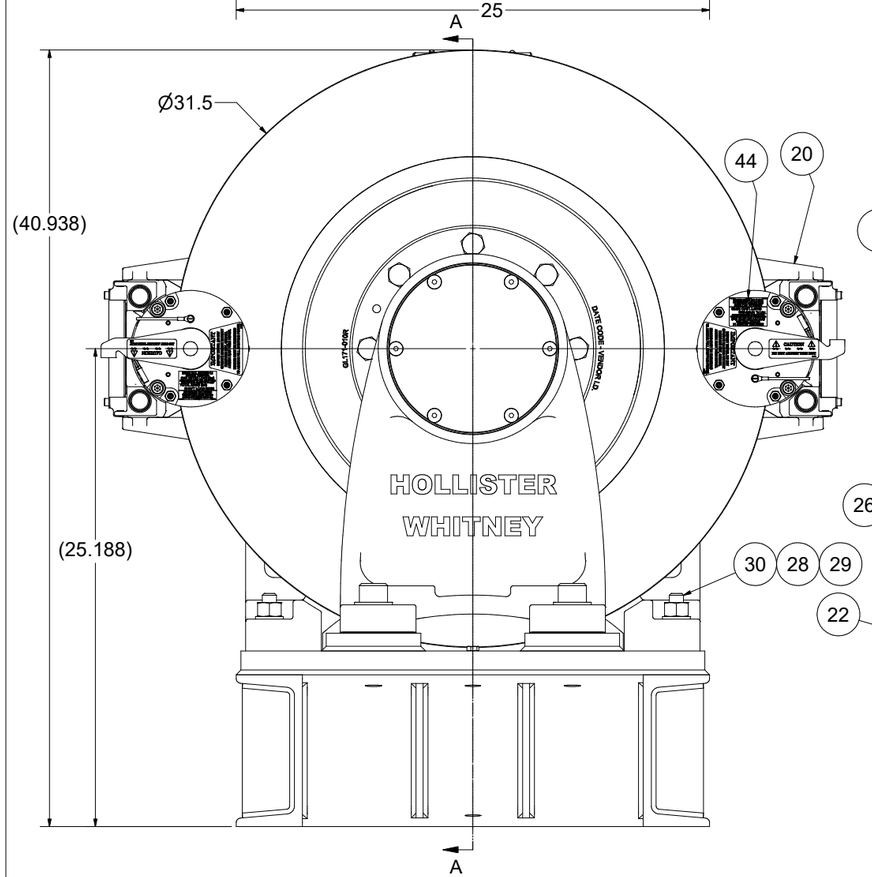

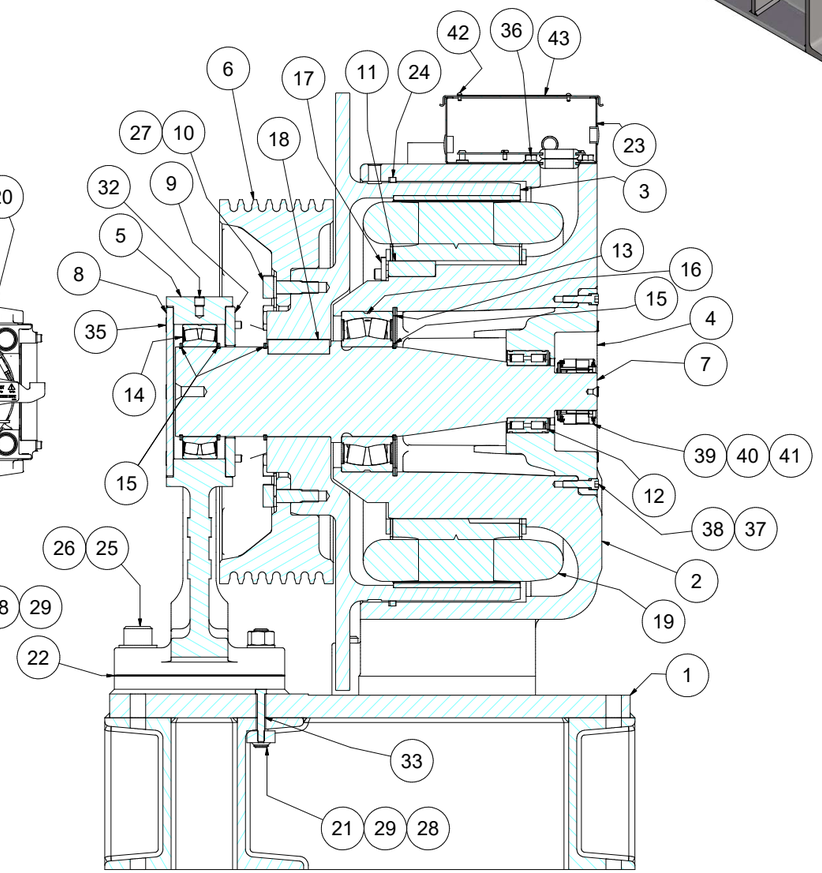

SECTION A-A
2500# CAP, 2X MAYR #6
SCALE 1 / 4
GL171 Series

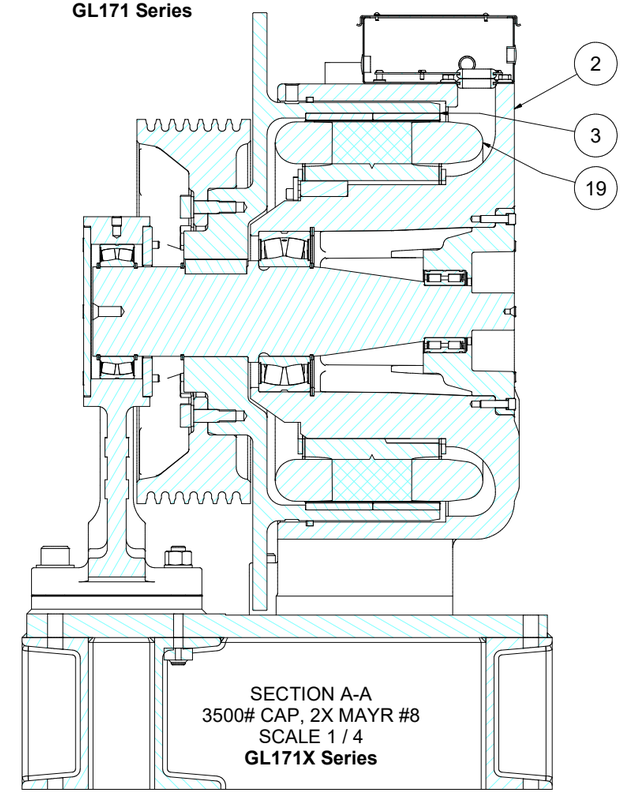

SECTION A-A
3500# CAP, 2X MAYR #8
SCALE 1 / 4
GL171X Series

WEIGHT: 2501.9 lbmass

J	ADD 3500# CAPACITY MACHINE w/BRAKES, ROTOR, HOUSING, WIDE 20" WHEEL, PUR #1712	LTL 12/8/22	HOLLISTER-WHITNEY ELEVATOR CO. LLC
			TITLE: GEARLESS MACHINE, BASEMENT SET ASSEMBLY
	THIRD ANGLE PROJECTION		DRAWN BY: LTL; SCALE: 1 / 4; MATERIAL: SEE PARTS LIST; REFERENCE TOL. ALL DIMENSIONS REFERENCE UNLESS OTHERWISE SPECIFIED
			SHEET SIZE: D; DATE: 9/26/2013; GL171BS SHEET 1 OF 4

THIS DRAWING IS SUPPLIED AS A REPRESENTATION OF THE EQUIPMENT HOLLISTER-WHITNEY ELEVATOR CO. LLC ("MANUFACTURER") HAS AGREED TO SUPPLY. SLIGHT ADJUSTMENTS MAY OCCUR DURING MANUFACTURING AND INSTALLATION. ANY MODIFICATIONS NOT APPROVED IN WRITING BY MANUFACTURER MAY AFFECT OPERATION, VOIDS ANY WARRANTY AND RELEASES MANUFACTURER OF ALL LIABILITY.
THIS DOCUMENT CONTAINS CONFIDENTIAL AND PROPRIETARY INFORMATION THAT CANNOT BE REPRODUCED OR DIVULGED, IN WHOLE OR IN PART, WITHOUT WRITTEN AUTHORIZATION FROM THE MANUFACTURER.

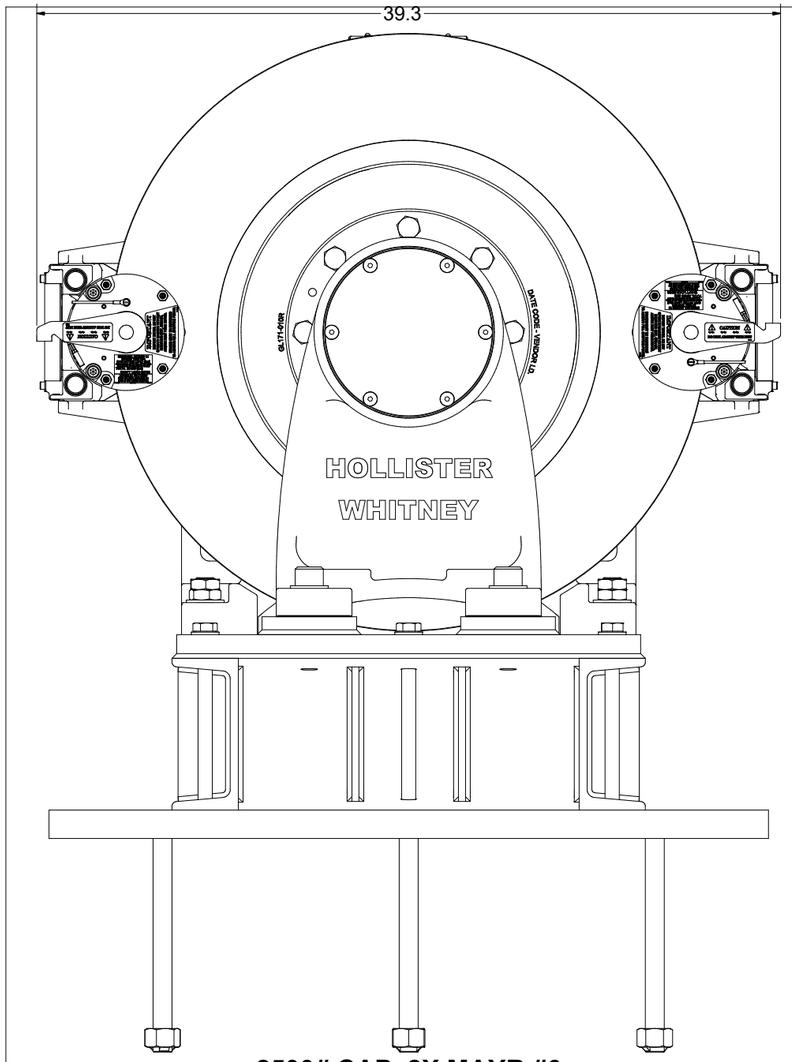

2500# CAP, 2X MAYR #6
SCALE 1 / 4
GL171 Series

ITEM	QTY	PART NUMBER	DESCRIPTION
1	1	GL171BS-01	FINISHING BASE, BASEMENT SET, GL131 & GL171
2	1	GL170-001	BASE HOUSING, MOTOR #GL170
		GL180-001	BASE HOUSING, MOTOR #GL181
3	1	GL171-002	ROTOR ASSEMBLY, MOTOR #GL170, TO 2500# CAP 50% CB
		GL181-002	ROTOR ASSEMBLY, MOTOR #GL181, TO 3500# CAP 50% CB
5	1	GL171-006	OUTBOARD STAND, AC GEARLESS
6	1	GL171-010	20" TRACTION SHEAVE, 7 x 1/2" ROPE MAX
7	1	GL171-018	MAIN SHAFT
8	1	GL185-019	END CAP
9	1	GL171-020	BEARING END CAP
10	8	GL100-073	BODY BOLT
11	1	GL100-088	KEY - STATOR CORE TO BASE
12	1	GL100-089	Bearing, Sealed Double Row Cylindrical Roller
13	1	GL130-090	SEALED SPHERICAL ROLLER BEARING
14	1	GL185-090	BEARING, SEALED SPHERICAL ROLLER
15	4	GL130-092	RETAINING RING - SHAFT
16	1	GL130-093	RETAINING RING - HOUSING
17	3	GL100-094-1	CLAMP - STATOR ASSEMBLY
18	1	GL171-095	KEY - MAIN SHAFT TO ROTOR
19	1	GL181-100	WINDING ASSEMBLY - 28 POLE (1:1 Application) SEE BELOW
		GL171-100	WINDING ASSEMBLY - 28 POLE (1:1 Application) SEE BELOW
		GL170-100	WINDING ASSEMBLY - 28 POLE (2:1 IN 1:1 APL.) SEE BELOW
20	1	GL130-144	DISC BRAKE (MAYR #8) -- THRU 1875# CAP 50% CB
	2	GL100-146	DISC BRAKE (MAYR #6) -- 1876# TO 2500# CAP 50% CB
	2	GL130-144	DISC BRAKE (MAYR #8) -- 2501# TO 3500# CAP 50% CB
21	1	GL171BS-156-5	SHIPPING BOLT
22	As Nec.	GL171-157-05	OUTBOARD STAND SHIM STOCK - 0.005"
		GL171-157-10	OUTBOARD STAND SHIM STOCK - 0.010"
		GL171-157-31	OUTBOARD STAND SHIM STOCK - 0.031"
23	1	GL100-159	ELECTRICAL ENCLOSURE, HOFFMAN A806CH - MODIFIED
24	1	GL100-165	FELT DUST SEAL
25	4	1 - 8 UNC x 3.5"	SOCKET HEAD CAP SCREW
26	4	1" WASHER	SAE WASHER
27	8	M18 LOCKWASHER-DIN 127B	HELICAL SPRING LOCK WASHER - BODY BOLT
28	6	3/4 WASHER	SAE WASHER
29	4	3/4 - 10 UNC	HEAVY HEX NUT
30	2	3/4-10 X 5"	HEX HEAD BOLT
31	2	3/4-10 UNC x 0.75	Hexagon Socket Set Screw - Flat Point
32	1	1/2-13 UNC x 0.5	Hexagon Socket Set Screw - Flat Point
33	1	3/8-16 X 2.5"	HEX HEAD BOLT
34	3	3/8 - 16 UNC - 1"	Hexagon Socket Head Cap Screw
35	6	3/8-16 UNC x 4	FLAT HEAD CAP SCREWS
36	4	3/8-16 UNC x 0.625	Hex Flange Screw - Regular Thread - Inch
37	8	0.375 WASHER	CAP SCREW LOCK WASHER
38	8	3/8 - 16 UNC - 1.5"	Hexagon Socket Head Cap Screw
39	4	#8 WASHER	INT. TOOTH LOCKWASHER
40	4	#8-32 x 1/4"	SOCKET HEAD CAP SCREW
41	1	ENC-113	ID# 81800-61 2048PPR 50mm HEIDENHAIN ENCODER
42	4	#6 U x 0.3125	DRIVE SCREW
43	1	P-173	MOTOR TAG - PMAC GEARLESS MACHINE
44	1 or 2	P-242	TAG, GL171 & GL181 - BRAKE RATINGS FOR MAYR #8
	2	P-212	TAG, GL171 - BRAKE RATINGS FOR MAYR #6

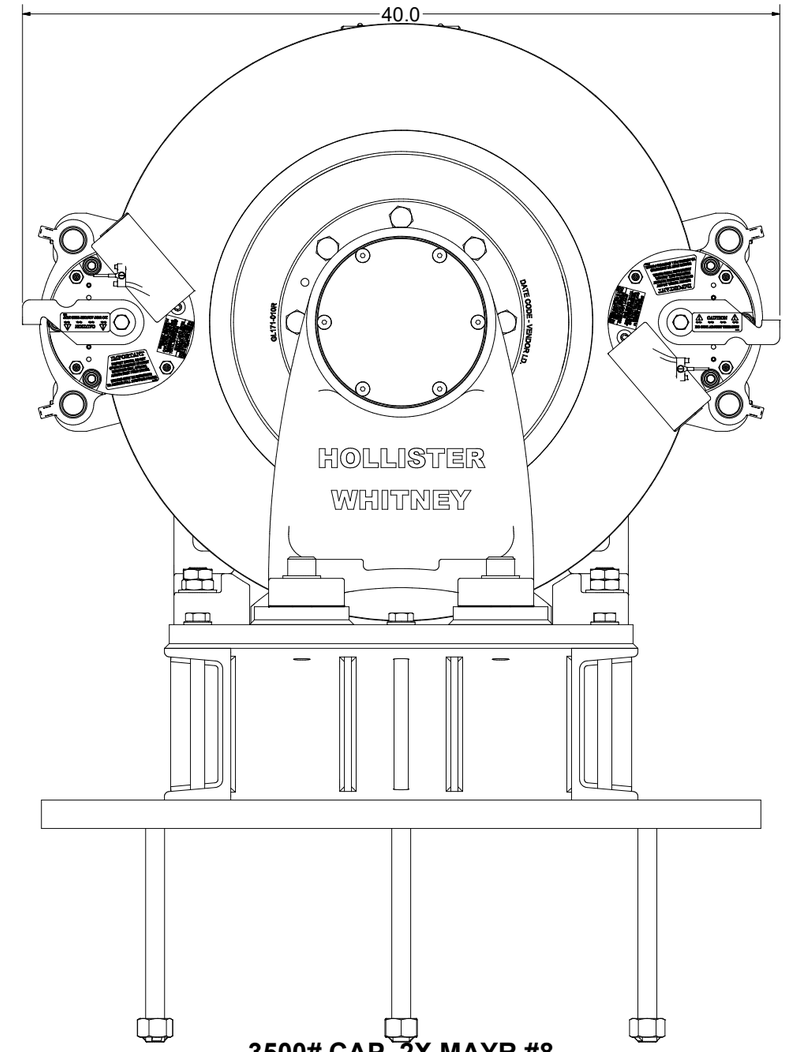

3500# CAP, 2X MAYR #8
SCALE 1 / 4
GL171X Series

1. **SHOWN WITH FOUNDATION PLATE FOR NEW-POUR, ANCHOR BOLTS INCLUDED**
2. **FOUNDATION PLATE FOR SECURING TO EXISTING STRUCTURE SIMILAR, ANCHOR BOLTS NOT INCLUDED**

	TRACTION WHEEL	ROPING	COUNTER BALANCE %					BRAKES REQUIRED
			50	47.5	45	42.5	40	
			CAPACITY (LBS)					
GL171-70	20"	1:1	1875	1775	1700	1625	1550	1X MAYR #8
		2:1	3750	3550	3400	3250	3125	
GL171-40 GL171-20	20"	1:1	2500	2400	2325	2250	2200	2X MAYR #6
		2:1	5000	4825	4675	4525	4400	
GL171X-35	20"	1:1	3500	3325	3175	3025	2900	2X MAYR #8
		2:1	7000	6650	6350	6050	5800	

THESE APPLICATIONS USING WINDINGS DESIGNED FOR 1:1											
						ROPED 1:1			ROPED 2:1		
MACHINE #	WINDING P/N	COIL/WINDING EFFICIENCY (%)	FRAME/MAGNET SIZE (mm)	VOLTAGE (Vac)	MACHINE SPEED (rpm)	CAR SPEED 20" (fpm)	CAR SPEED 15.75" (fpm)	CAR SPEED 15" (fpm)	CAR SPEED 20" (fpm)	CAR SPEED 15.75" (fpm)	CAR SPEED 15" (fpm)
GL171-20L	GL171-170-200	87	170	170	38.2	200	158	150	100	79	75
GL171-20H	GL171-360-200	87	170	360	38.2	200	158	150	100	79	75
GL171X-35H	GL181-380-350	87	170	380	66.8	350	276	263	175	138	131
GL171-40L	GL171-170-400	87	170	170	76.4	400	315	300	200	158	150
THESE APPLICATIONS USING WINDINGS DESIGNED FOR 2:1											
						ROPED 1:1			ROPED 2:1		
GL171-70L	GL170-170-350	93.9	170	170	178.3	933	735	700	467	368	350
GL171-70H	GL170-360-350	94	170	360	178.3	933	735	700	467	368	350

WEIGHT: 3090.9 lbmass

HOLLISTER-WHITNEY
ELEVATOR CO. LLC

TITLE: GEARLESS MACHINE, BASEMENT SET ASSEMBLY

THIS DRAWING IS SUPPLIED AS A REPRESENTATION OF THE EQUIPMENT HOLLISTER-WHITNEY ELEVATOR CO. LLC ("MANUFACTURER") HAS AGREED TO SUPPLY. SLIGHT ADJUSTMENTS MAY OCCUR DURING MANUFACTURING AND INSTALLATION. ANY MODIFICATIONS NOT APPROVED IN WRITING BY MANUFACTURER MAY AFFECT OPERATION, VOIDS ANY WARRANTY AND RELEASES MANUFACTURER OF ALL LIABILITY.
THIS DOCUMENT CONTAINS CONFIDENTIAL AND PROPRIETARY INFORMATION THAT CANNOT BE REPRODUCED OR DIVULGED, IN WHOLE OR IN PART, WITHOUT WRITTEN AUTHORIZATION FROM THE MANUFACTURER.

THIRD ANGLE PROJECTION

DRAWN BY	SCALE	MATERIAL	REFERENCE TOL.
LTL	1 / 4	SEE PARTS LIST	ALL DIMENSIONS REFERENCE UNLESS OTHERWISE SPECIFIED
SHEET SIZE: D	DATE: 9/26/2013		GL171BS SHEET 2 OF 4

PARTS LIST				
ITEM	QTY	PART NUMBER	DESCRIPTION	MASS
1	1	GL171BS	GEARLESS MACHINE, 2500# MAX CAP. 1:1 ROPED	2494.945 lbmass
2	1	GL171-BS-156	FOUNDATION PLATE ASSEMBLY - GL131 & GL171 BASEMENT SET	586.762 lbmass
3	6	3/4" - 10 UNC x 10 3/4"	HEX CAP SCREW	1.491 lbmass
4	6	3/4 WASHER	SAE WASHER	0.045 lbmass

1. **SUPPLIED FOUNDATION PLATE FOR NEW-POUR**
2. **SHOWN WITH 2500# GL171 Series MACHINE. 3500# GL171X Series MACHINE SIMILAR**

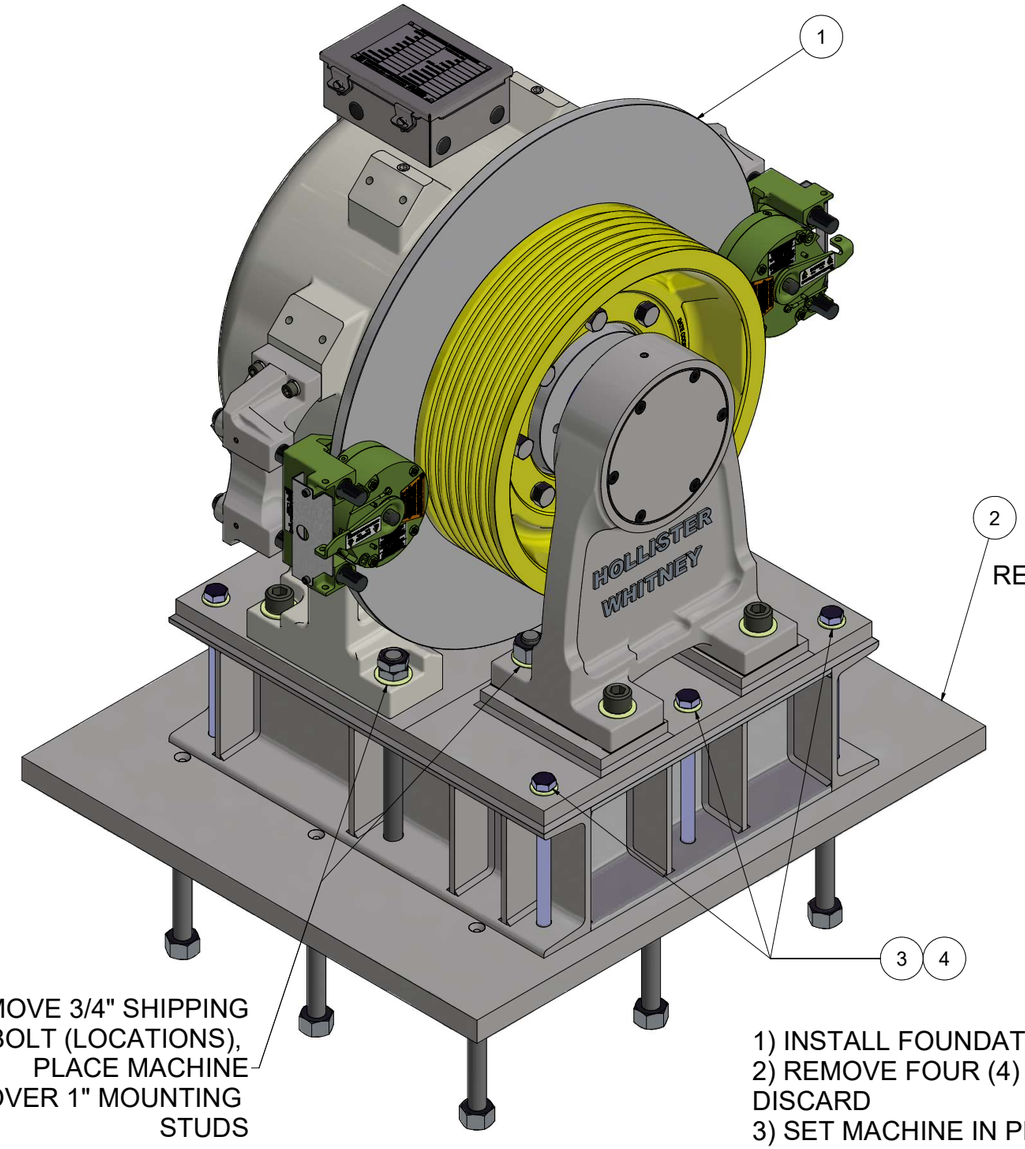

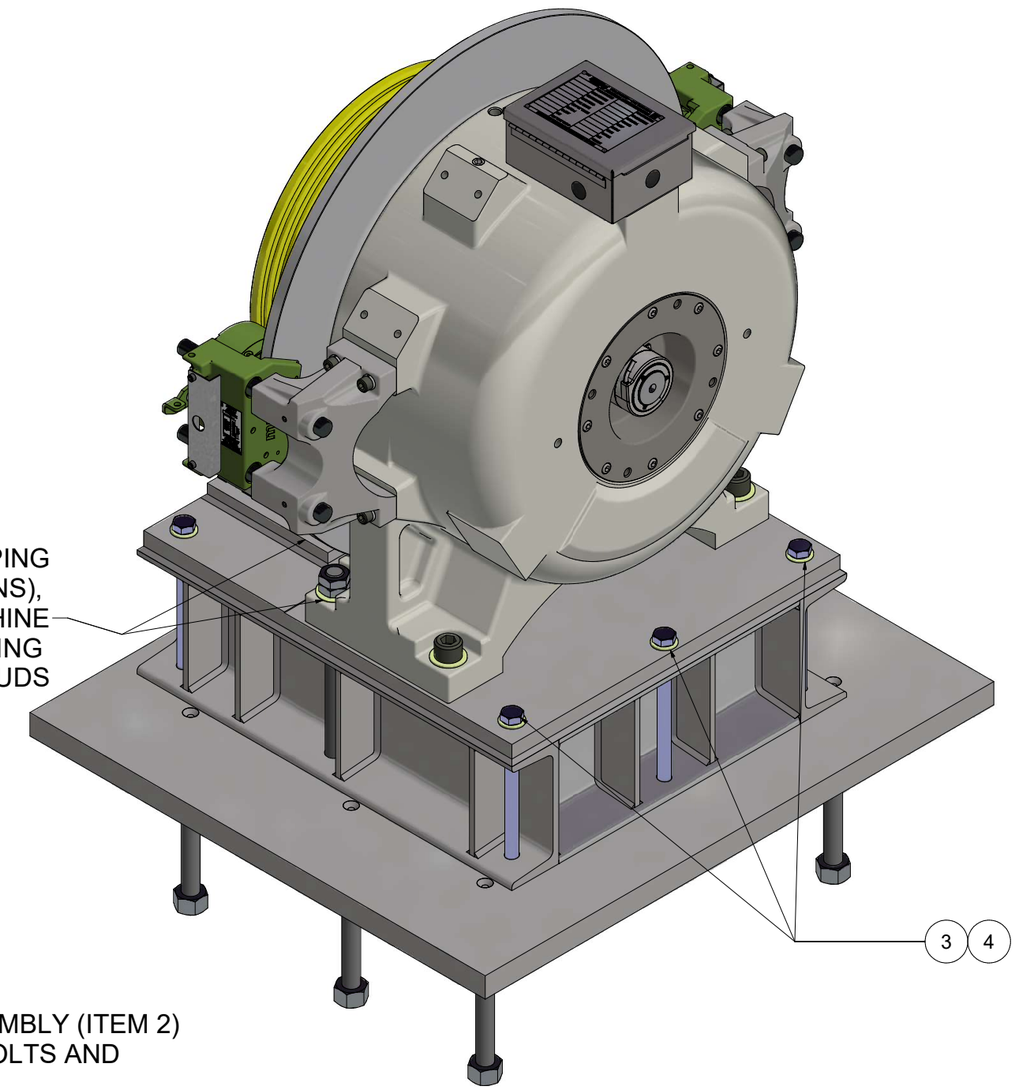

1) INSTALL FOUNDATION PLATE ASSEMBLY (ITEM 2)
2) REMOVE FOUR (4) 3/4" SHIPPING BOLTS AND DISCARD
3) SET MACHINE IN PLACE OVER 1" MOUNTING STUDS, PLACE WASHERS AND HAND-SNUG 4 HEAVY HEX NUTS ONTO STUDS
4) INSTALL 6X 3/4" GR.5 BOLTS AND WASHERS.
5) TIGHTEN 4X 1" HEAVY HEX NUTS & 6X 3/4" BOLTS TO GRADE 5 STANDARDS (APPROX. 575 ft-lbs FOR 1" & 245 ft-lbs FOR 3/4")

PARTS LIST			
ITEM	QTY	PART NUMBER	DESCRIPTION
1	1	GL171BS	GEARLESS MACHINE, 2500# MAX CAP. 1:1 ROPED
2	1	GL171BS-156A	FOUNDATION PLATE ASSEMBLY - GL131 & GL171 BASEMENT SET
3	6	3/4" - 10 UNC x 10 3/4"	HEX CAP SCREW
4	6	3/4 WASHER	SAE WASHER

1. **SUPPLIED FOUNDATION PLATE FOR SECURING TO EXISTING STRUCTURE**
2. **SHOWN WITH 2500# GL171 Series MACHINE. 3500# GL171X Series MACHINE SIMILAR**

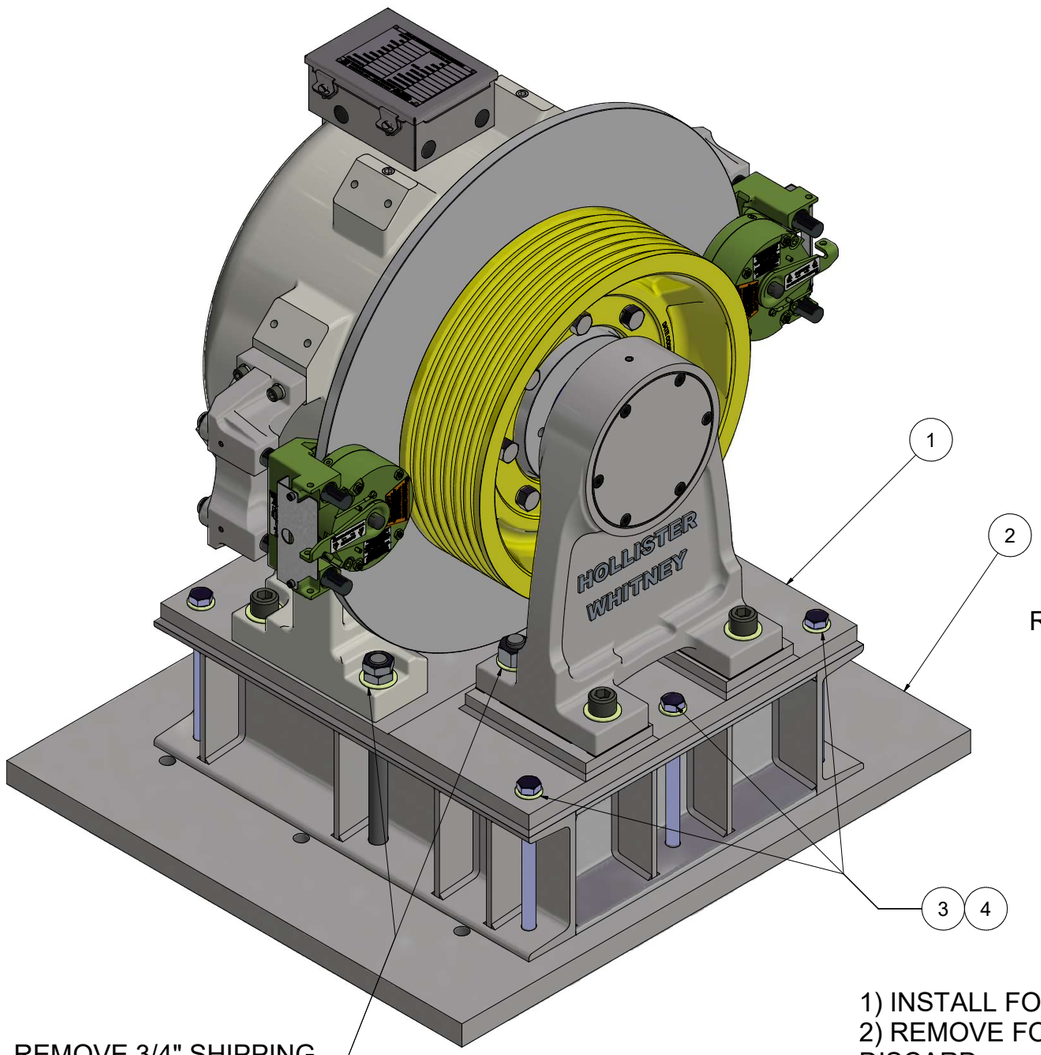

REMOVE 3/4" SHIPPING BOLT (LOCATIONS), PLACE MACHINE OVER 1" MOUNTING STUDS

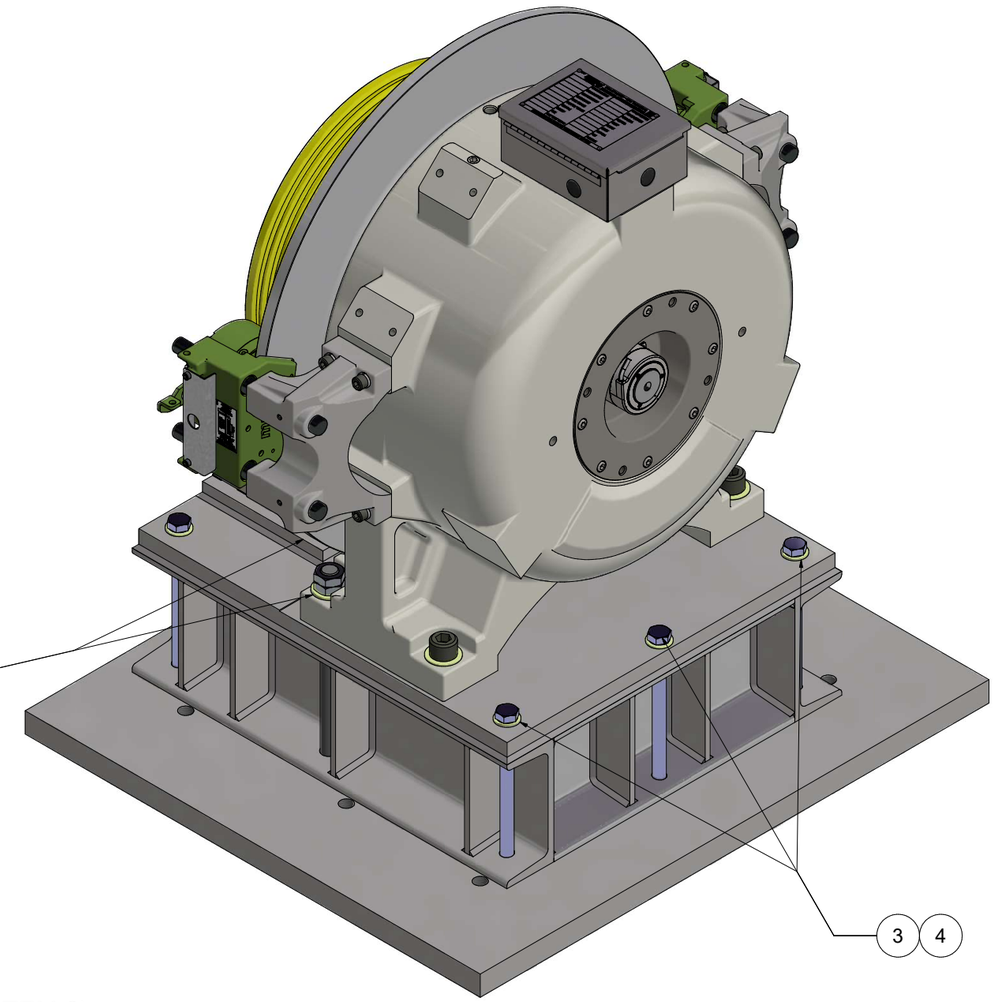

REMOVE 3/4" SHIPPING BOLT (LOCATIONS), PLACE MACHINE OVER 1" MOUNTING STUDS

1) INSTALL FOUNDATION PLATE ASSEMBLY (ITEM 2)
2) REMOVE FOUR (4) 3/4" SHIPPING BOLTS AND DISCARD
3) SET MACHINE IN PLACE OVER 1" MOUNTING STUDS, PLACE WASHERS AND HAND-SNUG 4 HEAVY HEX NUTS ONTO STUDS
4) INSTALL 6X 3/4" GR.5 BOLTS AND WASHERS.
5) TIGHTEN 4X 1" HEAVY HEX NUTS & 6X 3/4" BOLTS TO GRADE 5 STANDARDS (APPROX. 575 ft-lbs FOR 1" & 245 ft-lbs FOR 3/4")

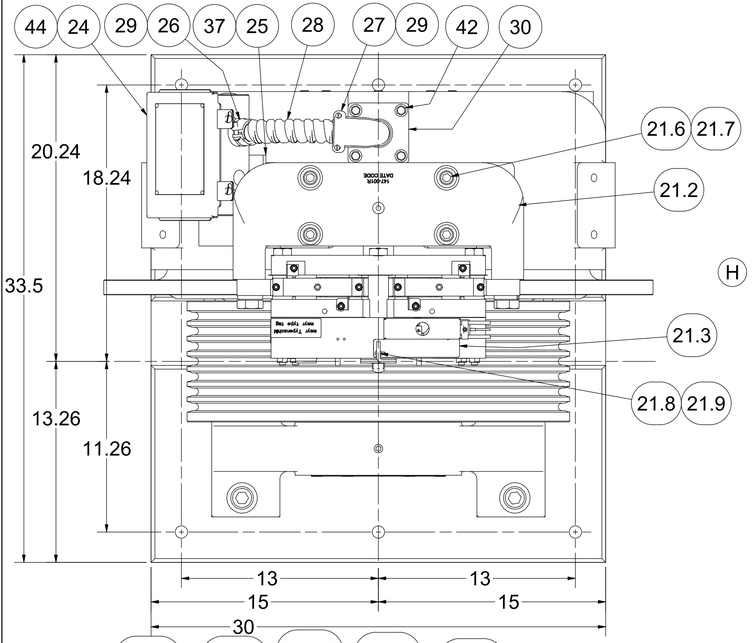

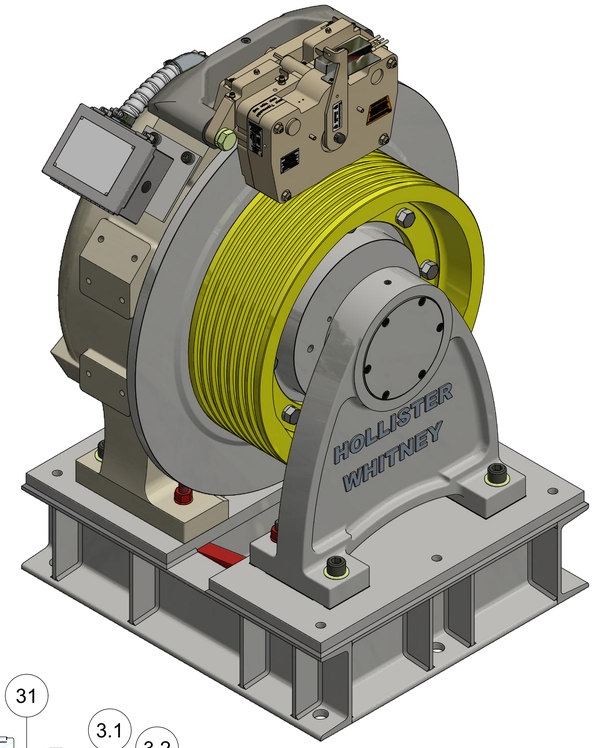

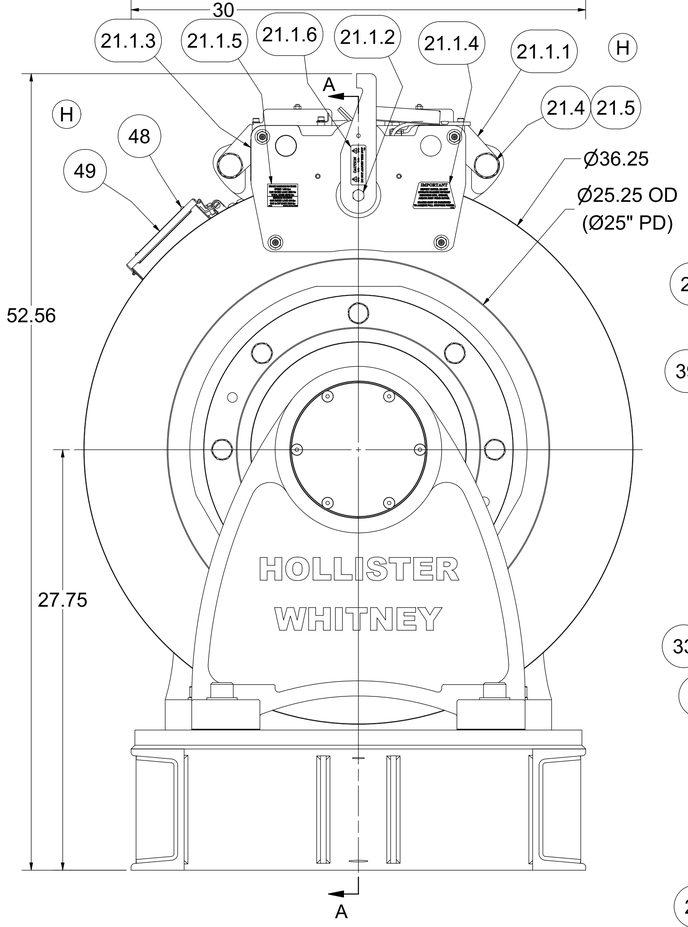

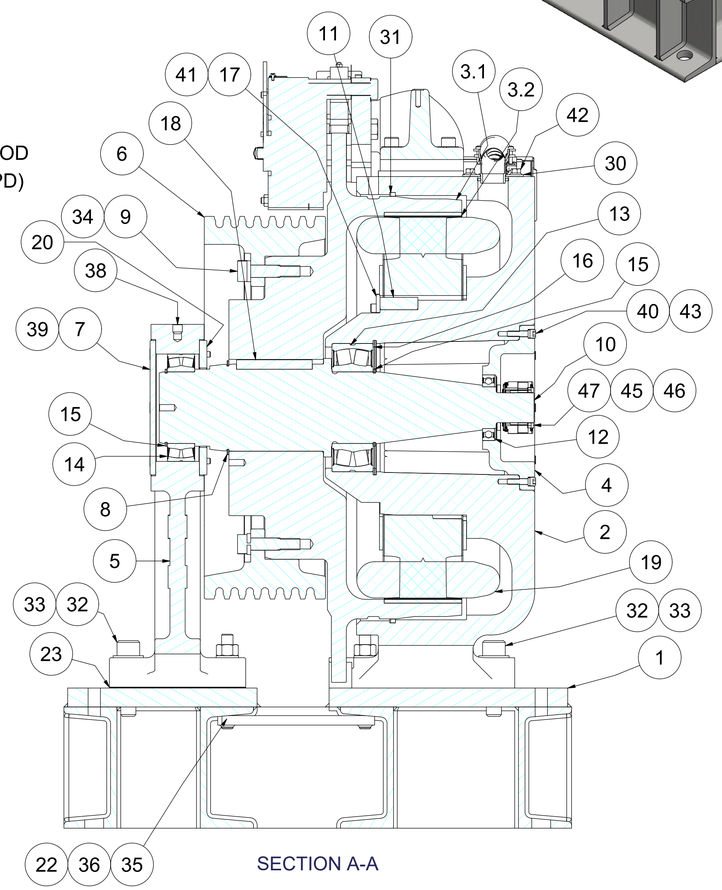

SECTION A-A

ITEM	QTY	PART NUMBER	DESCRIPTION
1	1	GL130ABS-01	FINISHING BASE, BASEMENT SET, GL130A
2	1	GL130A-001	BASE HOUSING, MOTOR #GL130A
3	1	GL130A-002	ROTOR ASSEMBLY - #GL130A, 25" T.S.
3.1	1	GL130A-004	ROTOR - GL130A, 25" T.S.
3.2	40	GL260-099	PERMANENT MAGNET - #GL260 & GL130A MOTORS
4	1	GL130A-005	BEARING CAP
5	1	GL185-006	OUTBOARD STAND, AC GEARLESS
6	1	GL185-008	SHEAVE, 25"
7	1	GL185-019	END CAP
8	1	GL185-020	RETAINING RING - ROTOR
9	8	GL185-073	BODY BOLT
10	1	GL130A-018	MAIN SHAFT - GL130A 1:1 MACHINE
11	1	GL100-088	KEY - STATOR CORE TO BASE
12	1	GL185-089	BEARING, SEALED SINGLE ROW DEEP GROOVE BALL
13	1	GL130-090	SEALED SPHERICAL ROLLER BEARING
14	1	GL185-090	BEARING, SEALED SPHERICAL ROLLER
15	2	GL130-092	RETAINING RING - SHAFT
16	1	GL130-093	RETAINING RING - HOUSING
G 17	3	GL100-094-1	CLAMP - STATOR ASSEMBLY
18	1	GL185-095	KEY - MAIN SHAFT TO ROTOR
19	1	GL130A-100	WINDING ASSEMBLY - 40 POLE
20	1	GL185-104	CAP
21	1	GL185-147	DISC BRAKE (MAYR 10.1) ASSEMBLY
21.1	1	GL185-147-115S	MAYR #10.1 BRAKE WITH STANDARD STICKERS
H 21.1.1	1	GL185-147-115	MAYR #10.1 BRAKE - RSD10/894.510.53S #8252206
21.1.2	1	142-050	BLACK VINYL CAP
21.1.3	1	P-175	TAG, GEARLESS MACHINE BRAKE AIRGAP DATA
21.1.4	1	P-190	ROTOR INSPECTION & BRAKE BURNISHING STICKER
21.1.5	1	P-214	TAG, GL130A, GL185 & GL260 - BRAKE RATINGS
21.1.6	1	P-229	CAUTION LABEL - DO NOT ADJUST THIS NUT
21.2	1	147-001	BRAKE BASE - LARGE FRAME GL MACHINE
21.3	1	147-003	COVER - MAYR #10.1 (GL185-147) ELECTRICAL
21.4	2	1-8 UNC - 3.5	Hex Cap Screw
21.5	2	1" WASHERS	Helical Spring Lock Washers
21.6	4	5/8-11 UNC - 2.5	SOCKET HEAD CAP SCREW
21.7	4	5/8 WASHER	SAE WASHER
21.8	1	M4 x 0.7 x 8 mm	SHCS - METRIC
21.9	1	#8 WASHER	STANDARD WASHER
21.10	AS NEC	143-026	BRAKE HOUSING SHIM - 0.03" (NOT SHOWN)
		143-027	BRAKE HOUSING SHIM - 0.06" (NOT SHOWN)
22	2	GL130A-BS-156-5	SHIPPING BOLT
23	AS NEC	GL185-157-05	OUTBOARD STAND SHIM - 0.005" GL185 A-STAND, 25" T.W.
		GL185-157-10	OUTBOARD STAND SHIM - 0.010" GL185 A-STAND, 25" T.W.
		GL185-157-31	OUTBOARD STAND SHIM - 0.031" GL185 A-STAND, 25" T.W.
24	1	GL100-159	ELECTRICAL ENCLOSURE, HOFFMAN A806CH - MODIFIED
25	1	GL130A-159-12	MOUNTING PLATE
26	2	GL100-159-13	1-1/4 STRAIGHT BOX CONNECTOR (FLEXCON) - REF P/N BRID412DC2
27	1	GL130A-159-13-1	1-1/4 90° BOX CONNECTOR (FLEXCON)
28	1	GL100-159-14	1-1/4 FLEX CONDUIT - REF. P/N GRF A114
29	2	GL100-159-15	1-1/4 ANTI SHORT BUSHING - REF. P/N THOMAS & BETTS CO. #425
30	1	GL100-159-16	BOX CONNECTOR PLATE
31	1	GL100-165-1	FELT DUST SEAL
32	4	1-8 UNC x 4	SOCKET HEAD CAP SCREW
33	4	1" WASHER	SAE WASHER
34	8	13/16 WASHER	HEAVY LOCK WASHER
35	4	3/4 UNC NUT	HEAVY HEX NUT
36	4	3/4 WASHER	SAE WASHER
37	2	5/8-11 UNC x 1	SOCKET HEAD CAP SCREW
38	1	5/8-11 UNC x 0.625	HALF DOG SET SCREW
39	6	3/8-16 UNC x 4	FLAT HEAD CAP SCREWS
40	8	3/8 - 16 UNC x 1.5	SOCKET HEAD CAP SCREW
G 41	3	3/8 - 16 UNC x 1.25	SOCKET HEAD CAP SCREW
42	4	3/8 - 16 UNC x 0.5	WHIZ BOLT
G 43	8	3/8 WASHER	SOCKET HEAD CAP SCREW LOCK
44	4	1/4-20 UNC x 0.5	WHIZ BOLT
45	4	#8-32 x 1/4"	SOCKET HEAD CAP SCREW
46	4	#8 LOCK WASHER	EXT. TOOTH LOCK WASHER
47	1	ECN 113 52810061	50mm HEIDENHAIN ENCODER
H 48	4	#6 U x 0.3125	DRIVE SCREW
49	1	P-173	MOTOR TAG - PMAC GEARLESS MACHINE

MACHINE #	WINDING P/N	COIL/WINDING EFFICIENCY (%)	FRAME/MAGNET SIZE (mm)	VOLTAGE (Vac)	MACHINE SPEED (RPM)	CAR SPEED 25" (fpm)
GL130A-20L	GL130A-170-200	90	130A/130	170	38.2	250
GL130A-20H	GL130A-360-200	90	130A/130	360	38.2	250
GL130A-40L	GL130A-170-400	91	130A/130	170	76.4	500

WEIGHT: 3938.3 lbmass

			G	3X GL100-094-1 WAS 1X GL185-094, 3X 3/8x1HHCS	LTL 7/2/19
				WAS 6X, REMOVE 6X 3/8 WASHERS, & UPDATE	
H	UPDATE BRAKE PARTS LIST & TAGS, PUR #1260	LTL 1/7/20		GL130A (1:1) WINDING CAPACITIES, PUR #1111	

HOLLISTER-WHITNEY
ELEVATOR CO. LLC

TITLE: GEARLESS MACHINE, 2500# CAP w/25" TW; 1:1 ROPED, 50% CB

THIS DRAWING IS SUPPLIED AS A REPRESENTATION OF THE EQUIPMENT HOLLISTER-WHITNEY ELEVATOR CO. LLC ("MANUFACTURER") HAS AGREED TO SUPPLY. SLIGHT ADJUSTMENTS MAY OCCUR DURING MANUFACTURING AND INSTALLATION. ANY MODIFICATIONS NOT APPROVED IN WRITING BY MANUFACTURER MAY AFFECT OPERATION, VOIDS ANY WARRANTY AND RELEASES MANUFACTURER OF ALL LIABILITY.
THIS DOCUMENT CONTAINS CONFIDENTIAL AND PROPRIETARY INFORMATION THAT CANNOT BE REPRODUCED OR DIVULGED, IN WHOLE OR IN PART, WITHOUT WRITTEN AUTHORIZATION FROM THE MANUFACTURER.

THIRD ANGLE PROJECTION

DRAWN BY	SCALE	MATERIAL	REFERENCE TOL.
LTL	1 / 5	SEE PARTS LIST	ALL DIMENSIONS REFERENCE UNLESS OTHERWISE SPECIFIED
SHEET SIZE D		DATE 7/11/2013	G GL130A-BS SHEET 1 OF 3

PARTS LIST				
ITEM	QTY	PART NUMBER	DESCRIPTION	MASS
1	1	GL130A-BS	GEARLESS MACHINE, 2500# CAP w/25" TW; 1:1 ROPED	3929.056 lbmass
2	1	GL130A-BS-156	FOUNDATION PLATE ASSEMBLY - GL130A BASEMENT SET	619.197 lbmass
3	6	3/4 -10 UNC x 10.75"	HEX CAP SCREW	1.491 lbmass
4	6	3/4 WASHER	SAE WASHER	0.045 lbmass

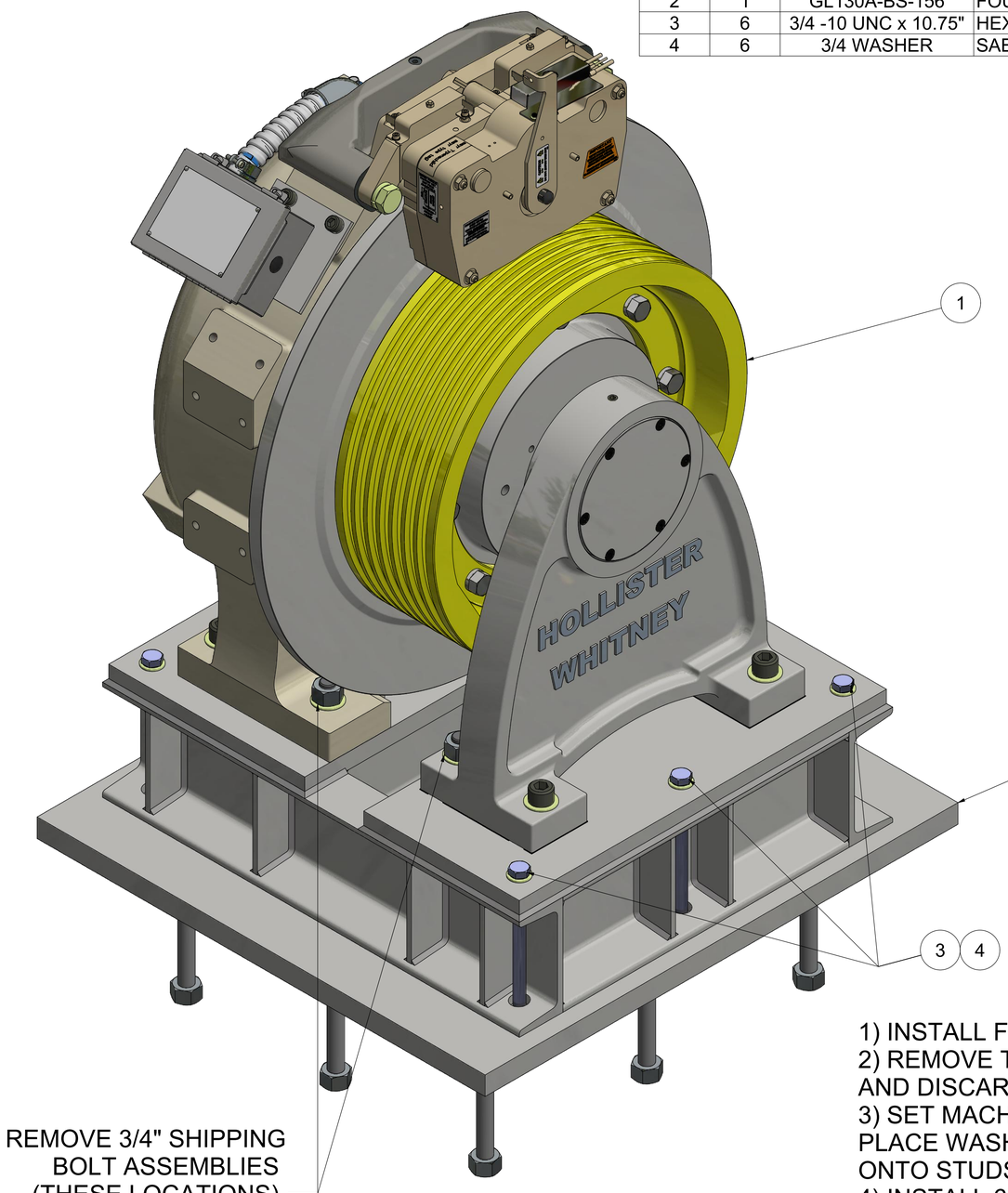

REMOVE 3/4" SHIPPING BOLT ASSEMBLIES (THESE LOCATIONS), PLACE MACHINE OVER 1" MOUNTING STUDS

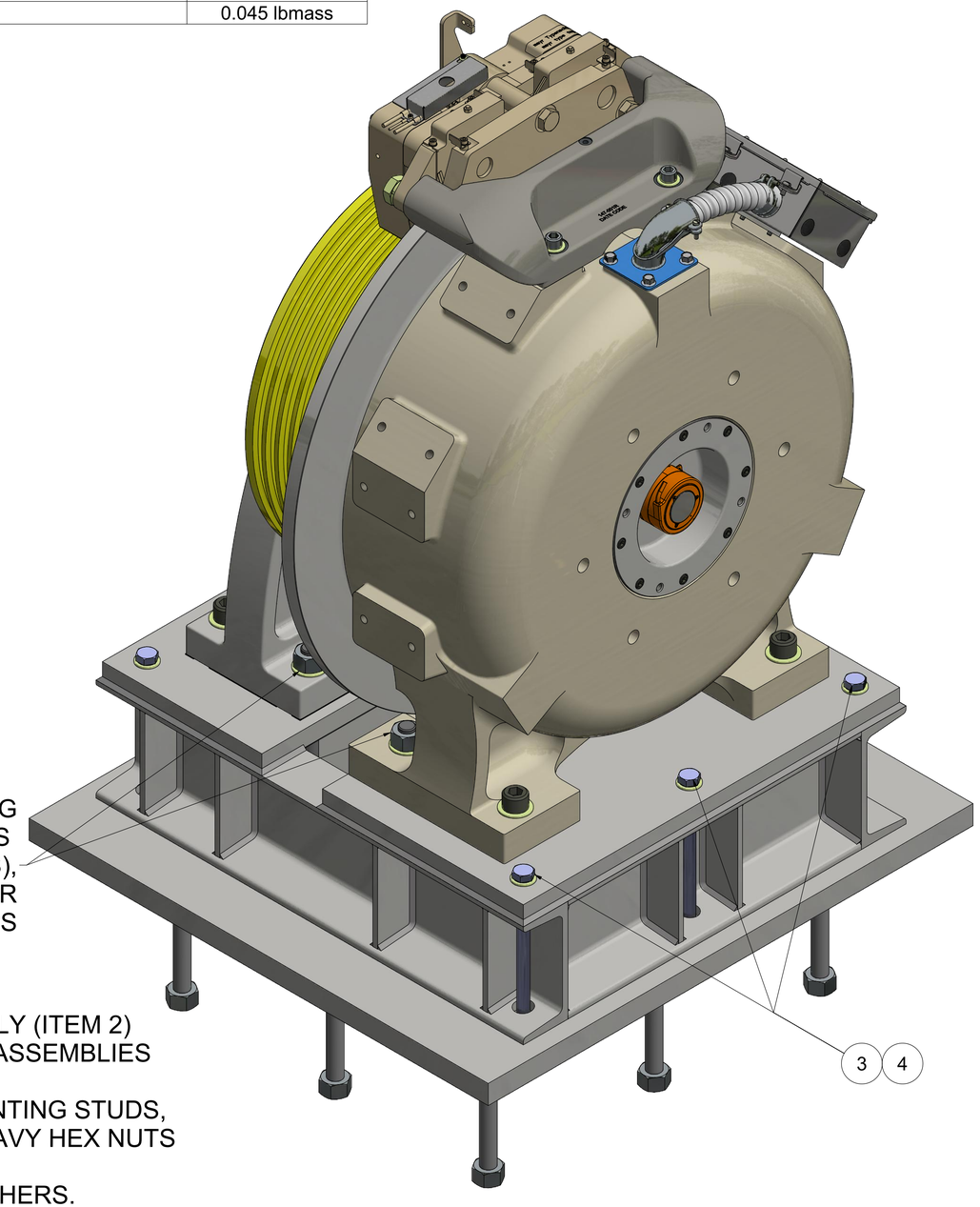

REMOVE 3/4" SHIPPING BOLT ASSEMBLIES (THESE LOCATIONS), PLACE MACHINE OVER 1" MOUNTING STUDS

1) INSTALL FOUNDATION PLATE ASSEMBLY (ITEM 2)
2) REMOVE TWO (2) 3/4" SHIPPING BOLT ASSEMBLIES AND DISCARD
3) SET MACHINE IN PLACE OVER 1" MOUNTING STUDS, PLACE WASHERS AND HAND-SNUG 4 HEAVY HEX NUTS ONTO STUDS
4) INSTALL 6X 3/4" GR.5 BOLTS AND WASHERS.
5) TIGHTEN 4X 1" HEAVY HEX NUTS & 6X 3/4" BOLTS TO GRADE 5 STANDARDS (APPROX. 575 ft-lbs FOR 1" & 245 ft-lbs FOR 3/4")

PARTS LIST				
ITEM	QTY	PART NUMBER	DESCRIPTION	MASS
1	1	GL130A-BS	GEARLESS MACHINE, 2500# CAP w/25" TW; 1:1 ROPED	3929.056 lbmass
2	1	GL130A-BS-156A	FOUNDATION ADAPTOR PLATE ASSEMBLY - GL130A BASEMENT SET	593.364 lbmass
3	6	3/4 -10 UNC x 10.75"	HEX CAP SCREW	1.491 lbmass
4	6	3/4 WASHER	SAE WASHER	0.045 lbmass

1) INSTALL FOUNDATION PLATE ASSEMBLY (ITEM 2)
2) REMOVE TWO (2) SHIPPING BOLT ASSEMBLIESS AND DISCARD
3) SET MACHINE IN PLACE OVER 1" MOUNTING STUDS, PLACE WASHERS AND HAND-SNUG 4 HEAVY HEX NUTS ONTO STUDS
4) INSTALL 6X 3/4" GR.5 BOLTS AND WASHERS.
5) TIGHTEN 4X 1" HEAVY HEX NUTS & 6X 3/4" BOLTS TO GRADE 5 STANDARDS (APPROX. 575 ft-lbs FOR 1" & 245 ft-lbs FOR 3/4")

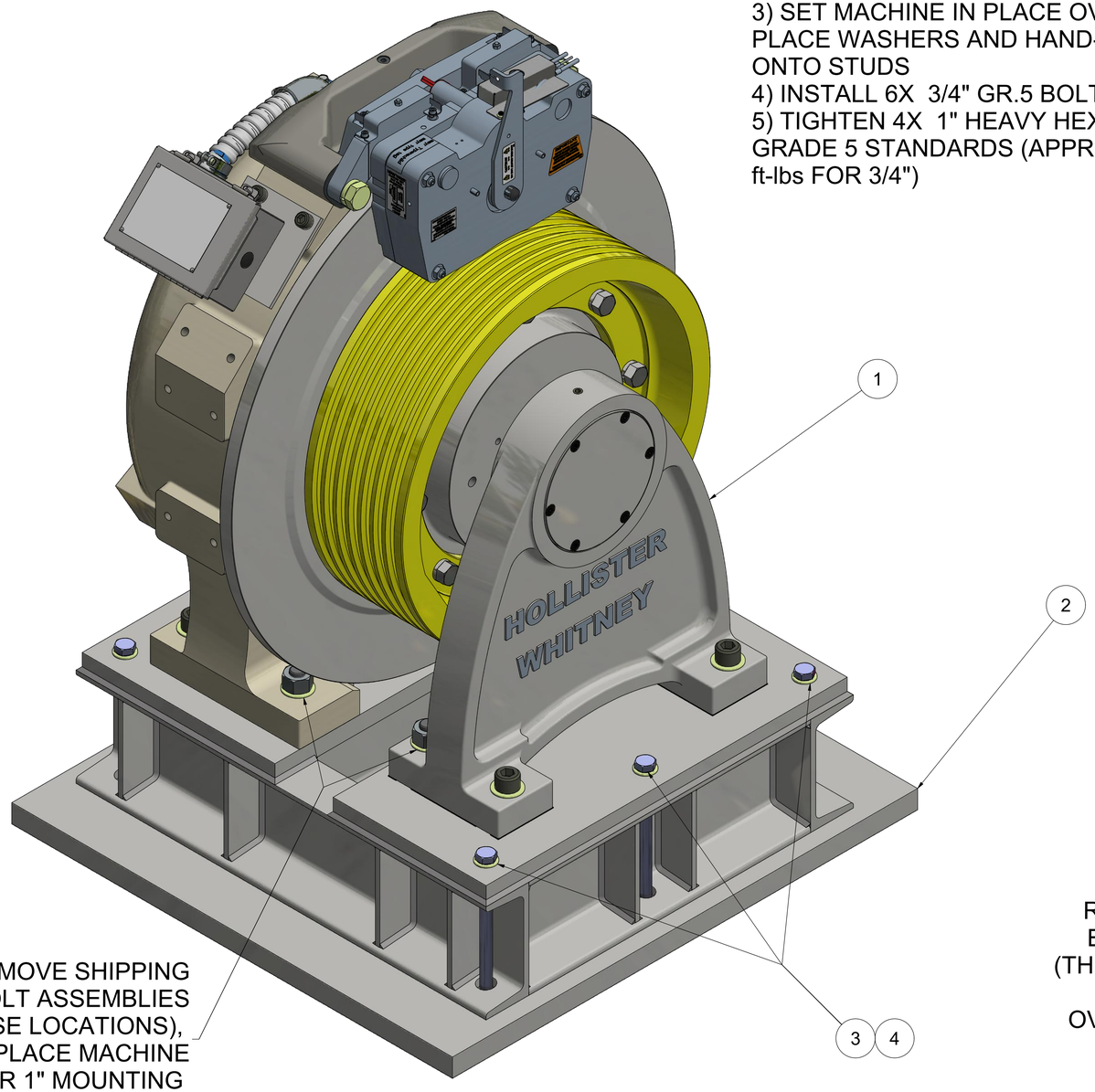

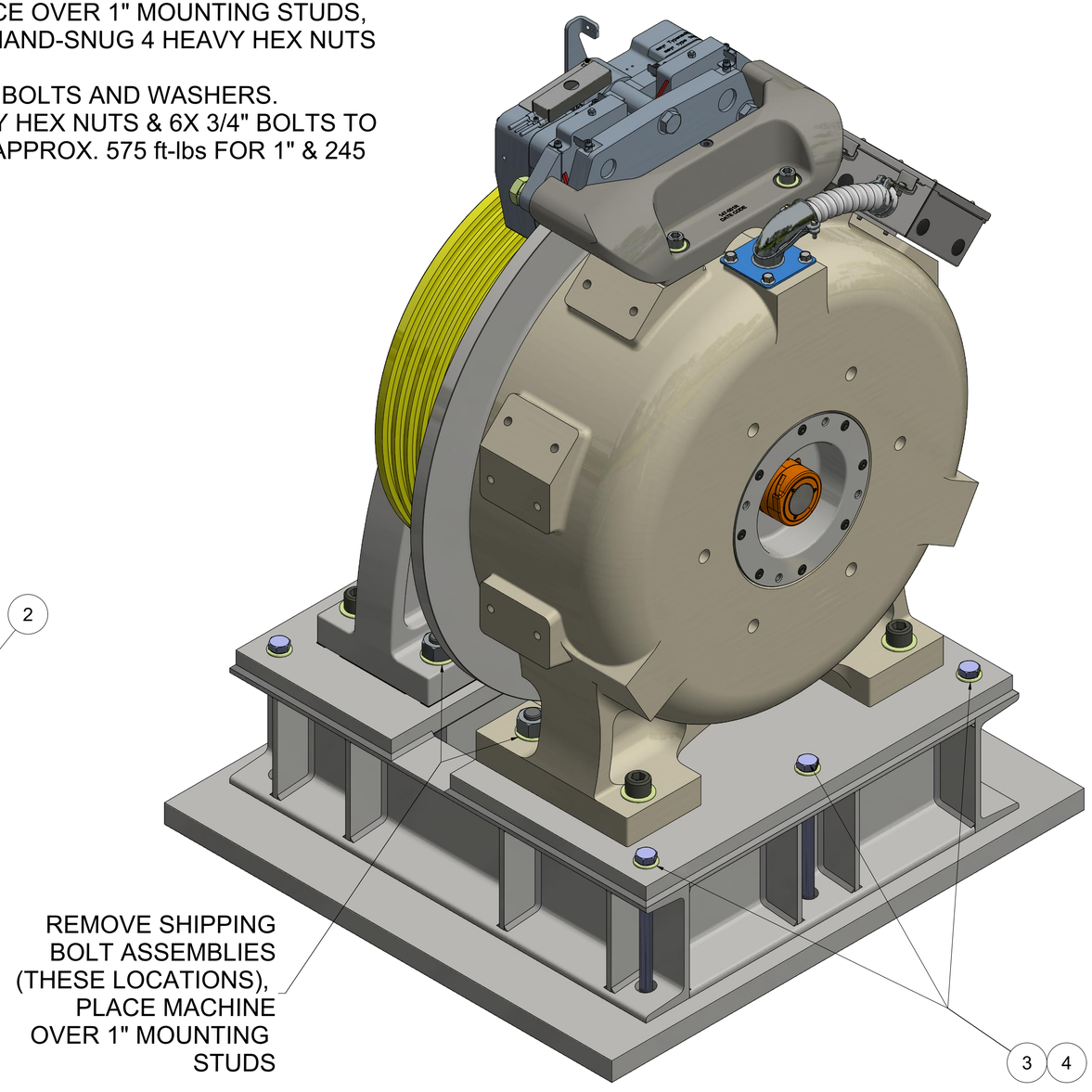

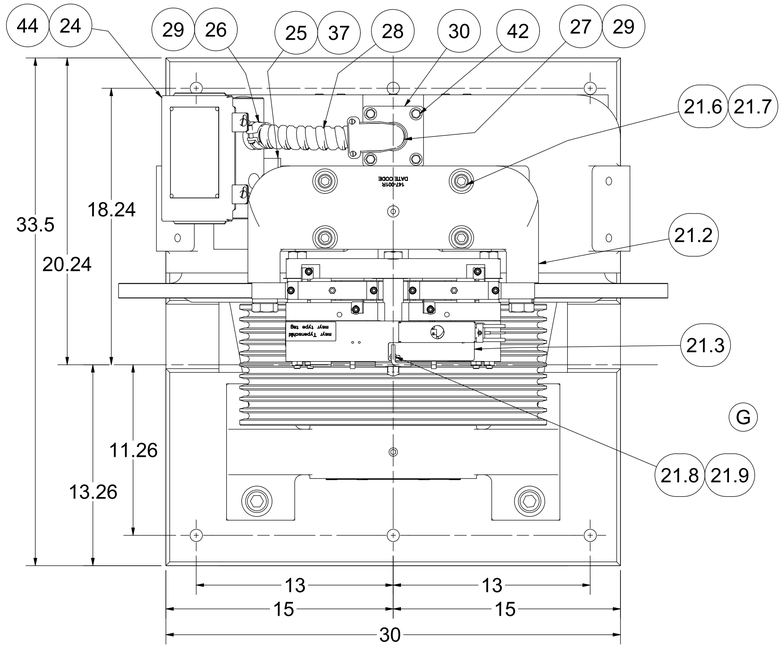

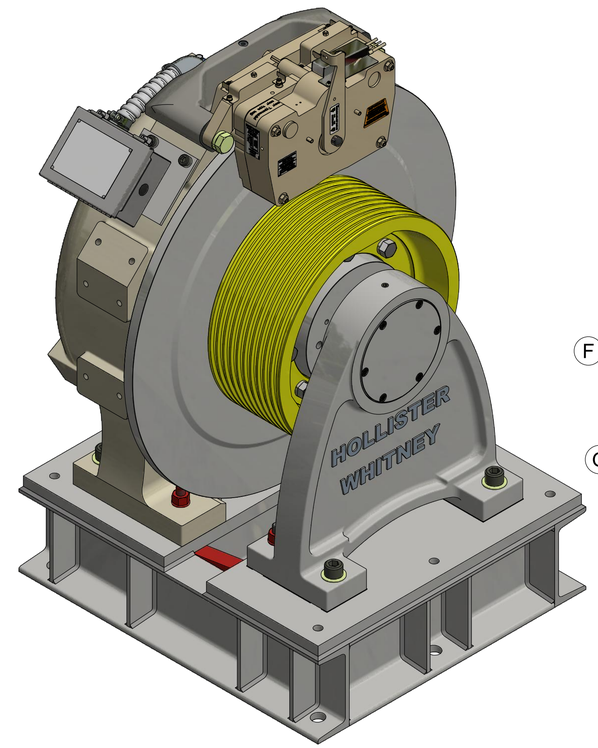

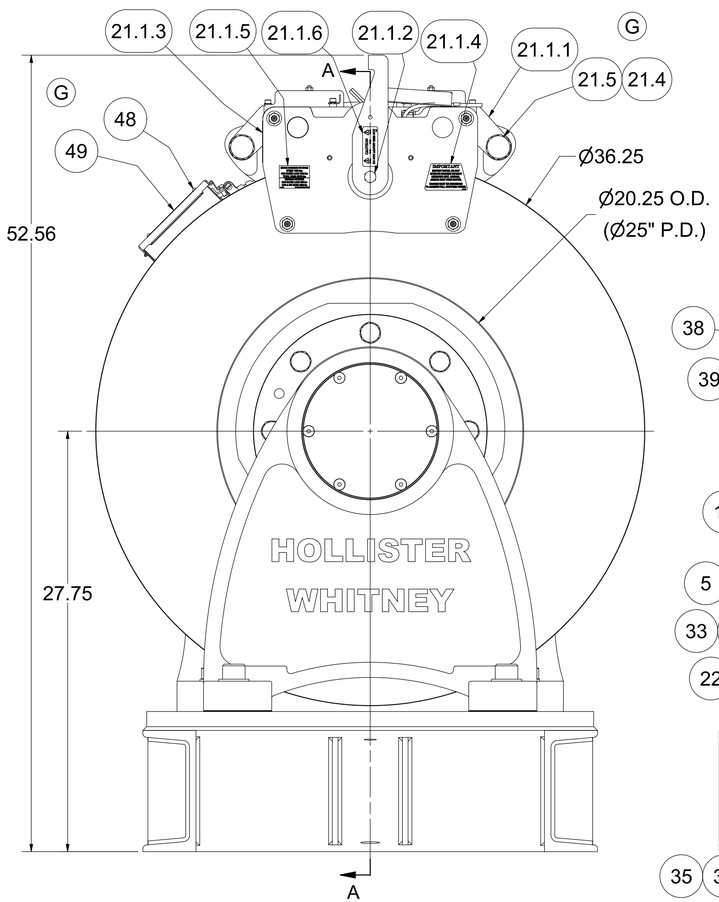

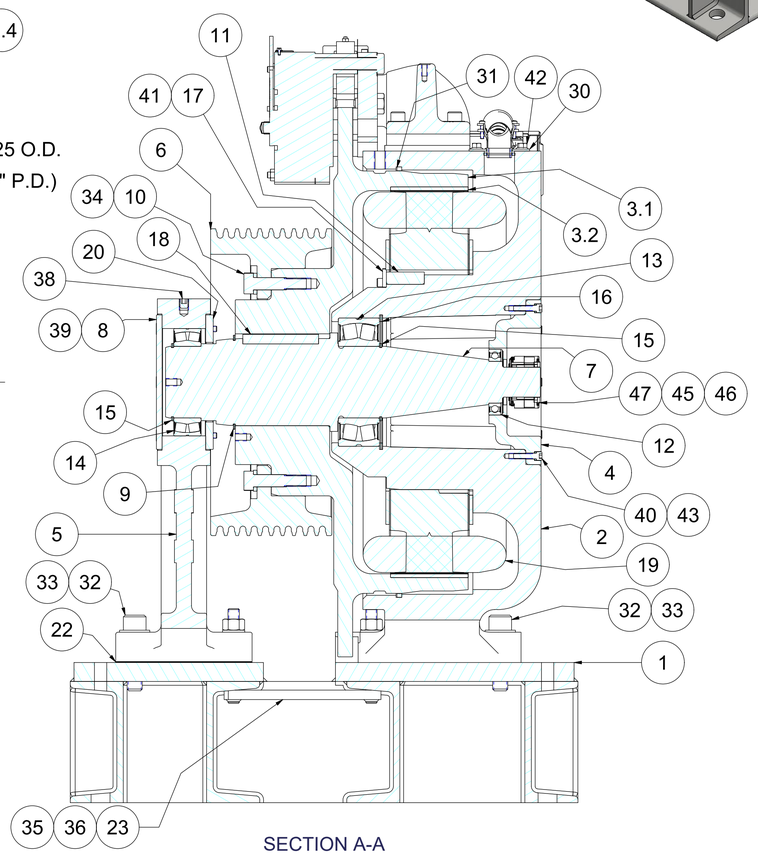

SECTION A-A

ITEM	QTY	PART NUMBER	DESCRIPTION
1	1	GL130ABS-01	FINISHING BASE, BASEMENT SET, GL130A
2	1	GL130A-001	BASE HOUSING, MOTOR #GL130A
3	1	GL130A-002-1	ROTOR ASSEMBLY - #GL130A1, 20" T.S.
3.1	1	GL130A-004-1	ROTOR - GL130A1, 20" T.S.
3.2	40	GL260-099	PERMANENT MAGNET - #GL260 & GL130A MOTORS
4	1	GL130A-005	BEARING CAP
5	1	GL185-006	OUTBOARD STAND, AC GEARLESS
6	1	GL130A-008	TRACTION SHEAVE, 20"
7	1	GL185-019	END CAP
8	1	GL185-020	RETAINING RING - ROTOR
9	8	GL185-073	BODY BOLT
10	1	GL130A-018	MAIN SHAFT - GL130A 1:1 MACHINE
11	1	GL100-088	KEY - STATOR CORE TO BASE
12	1	GL185-089	BEARING, SEALED SINGLE ROW DEEP GROOVE BALL
13	1	GL130-090	SEALED SPHERICAL ROLLER BEARING
14	1	GL185-090	BEARING, SEALED SPHERICAL ROLLER
15	2	GL130-092	RETAINING RING - SHAFT
16	1	GL130-093	RETAINING RING - HOUSING
17	1	GL100-094-1	CLAMP - STATOR ASSEMBLY
18	1	GL185-095	KEY - MAIN SHAFT TO ROTOR
19	1	GL130A-100	WINDING ASSEMBLY - 40 POLE
20	1	GL185-104	CAP
21	1	GL185-147	DISC BRAKE (MAYR 10.1) ASSEMBLY
21.1	1	GL185-147-115S	MAYR #10.1 BRAKE WITH STANDARD STICKERS
21.1.1	1	GL185-147-115	MAYR #10.1 BRAKE - RSD10/894.510.53S #8252206
21.1.2	1	142-050	BLACK VINYL CAP
21.1.3	1	P-175	TAG, GEARLESS MACHINE BRAKE AIRGAP DATA
21.1.4	1	P-190	ROTOR INSPECTION & BRAKE BURNISHING STICKER
21.1.5	1	P-214	TAG, GL130A, GL185 & GL260 - BRAKE RATINGS
21.1.6	1	P-229	CAUTION LABEL - DO NOT ADJUST THIS NUT
21.2	1	147-001	BRAKE BASE - LARGE FRAME GL MACHINE
21.3	1	147-003	COVER - MAYR #10.1 (GL185-147) ELECTRICAL
21.4	2	1" WASHERS	Helical Spring Lock Washers
21.5	2	1-8 UNC - 3.5	Hex Cap Screw
21.6	4	5/8-11 UNC - 2.5	SOCKET HEAD CAP SCREW
21.7	4	5/8 WASHER	SAE WASHER
21.8	1	M4 x 0.7 x 8 mm	SHCS - METRIC
21.9	1	#8 WASHER	STANDARD WASHER
21.10	AS	143-026	BRAKE HOUSING SHIM - 0.03" (NOT SHOWN)
	NE	143-027	BRAKE HOUSING SHIM - 0.06" (NOT SHOWN)
22	2	GL130A-BS-156-5	SHIPPING BOLT
23	AS	GL185-157-05	OUTBOARD STAND SHIM - 0.005" GL185 A-STAND, 25" T.W.
	NE	GL185-157-10	OUTBOARD STAND SHIM - 0.010" GL185 A-STAND, 25" T.W.
	C	GL185-157-31	OUTBOARD STAND SHIM - 0.031" GL185 A-STAND, 25" T.W.
24	1	GL100-159	ELECTRICAL ENCLOSURE, HOFFMAN A806CH - MODIFIED
25	1	GL130A-159-12	MOUNTING PLATE
26	1	GL100-159-13	1-1/4 STRAIGHT BOX CONNECTOR (FLEXCON) - REF P/N BRID412DC2
27	1	GL100-159-13-1	1-1/4 90° BOX CONNECTOR (FLEXCON)
28	2	GL100-159-14	1-1/4 FLEX CONDUIT - REF. P/N GRF A114
29	2	GL100-159-15	1-1/4 ANTI SHORT BUSHING - REF. P/N THOMAS & BETTS CO. #425
30	1	GL100-159-18	BOX CONNECTOR PLATE
31	1	GL100-165-1	FELT DUST SEAL
32	4	1-8 UNC x 4	SOCKET HEAD CAP SCREW
33	4	1" WASHER	SAE WASHER
34	8	13/16 WASHER	HEAVY LOCK WASHER
35	4	3/4 UNC NUT	HEAVY HEX NUT
36	4	3/4 WASHER	SAE WASHER
37	2	5/8-11 UNC x 1	SOCKET HEAD CAP SCREW
38	1	5/8-11 UNC x 0.625	HALF DOG SET SCREW
39	6	3/8-16 UNC x 4	FLAT HEAD CAP SCREWS
40	8	3/8 - 16 UNC x 1.5	SOCKET HEAD CAP SCREW
41	6	3/8 - 16 UNC x 1.25	SOCKET HEAD CAP SCREW
42	4	3/8 - 16 UNC x 0.5	WHIZ BOLT
43	8	3/8 WASHER	SOCKET HEAD CAP SCREW LOCK
44	4	1/4-20 UNC x 0.5	WHIZ BOLT
45	4	#8-32 x 1/4"	SOCKET HEAD CAP SCREW
46	4	#8 LOCK WASHER	EXT. TOOTH LOCK WASHER
47	1	ECN 113 52810061	50mm HEIDENHAIN ENCODER
48	4	#6 U x 0.3125	DRIVE SCREW
49	1	P-173	MOTOR TAG - PMAC GEARLESS MACHINE

MACHINE #	WINDING P/N	COIL/WINDING EFFICIENCY (%)	FRAME/MAGNET SIZE (mm)	VOLTAGE (Vac)	MACHINE SPEED (RPM)	CAR SPEED 20" (fpm)
GL130A-20L	GL130A-170-200	90	130A/130	170	38.2	200
GL130A-20H	GL130A-360-200	90	130A/130	360	38.2	200
GL130A-40L	GL130A-170-400	91	130A/130	170	76.4	400

WEIGHT: 3663.8 lbmass

			F	3X GL100-094-1 WAS 1X GL185-094, 3X 3/8x1HHCS WAS 6X, REMOVE 6X 3/8 WASHERS, & UPDATE GL130A (1:1) WINDING CAPACITIES, PUR #1111	LTL 7/2/19
G	UPDATE BRAKE PARTS LIST & TAGS, PUR #1260	LTL 1/7/20			

THIS DRAWING IS SUPPLIED AS A REPRESENTATION OF THE EQUIPMENT HOLLISTER-WHITNEY ELEVATOR CO. LLC ("MANUFACTURER") HAS AGREED TO SUPPLY. SLIGHT ADJUSTMENTS MAY OCCUR DURING MANUFACTURING AND INSTALLATION. ANY MODIFICATIONS NOT APPROVED IN WRITING BY MANUFACTURER MAY AFFECT OPERATION, VOIDS ANY WARRANTY AND RELEASES MANUFACTURER OF ALL LIABILITY.
THIS DOCUMENT CONTAINS CONFIDENTIAL AND PROPRIETARY INFORMATION THAT CANNOT BE REPRODUCED OR DIVULGED, IN WHOLE OR IN PART, WITHOUT WRITTEN AUTHORIZATION FROM THE MANUFACTURER.

THIRD ANGLE PROJECTION

HOLLISTER-WHITNEY
ELEVATOR CO. LLC

TITLE: GEARLESS MACHINE, 3125# CAP w/20" TW; 1:1 ROPED, 50% CB

DRAWN BY	SCALE	MATERIAL	REFERENCE TOL.
LTL	1 / 5	SEE PARTS LIST	ALL DIMENSIONS REFERENCE UNLESS OTHERWISE SPECIFIED
SHEET SIZE: D		DATE: 8/22/2013	GL130A1-BS

SHEET 1 OF 3

PARTS LIST				
ITEM	QTY	PART NUMBER	DESCRIPTION	MASS
1	1	GL130A1-BS	GEARLESS MACHINE, 3125# CAP w/20" TW; 1:1 ROPED	3654.561 lbmass
2	1	GL130A-BS-156	FOUNDATION PLATE ASSEMBLY - GL130A BASEMENT SET	619.197 lbmass
3	6	3/4 -10 UNC x 10.75"	HEX CAP SCREW	1.491 lbmass
4	6	3/4 WASHER	SAE WASHER	0.045 lbmass

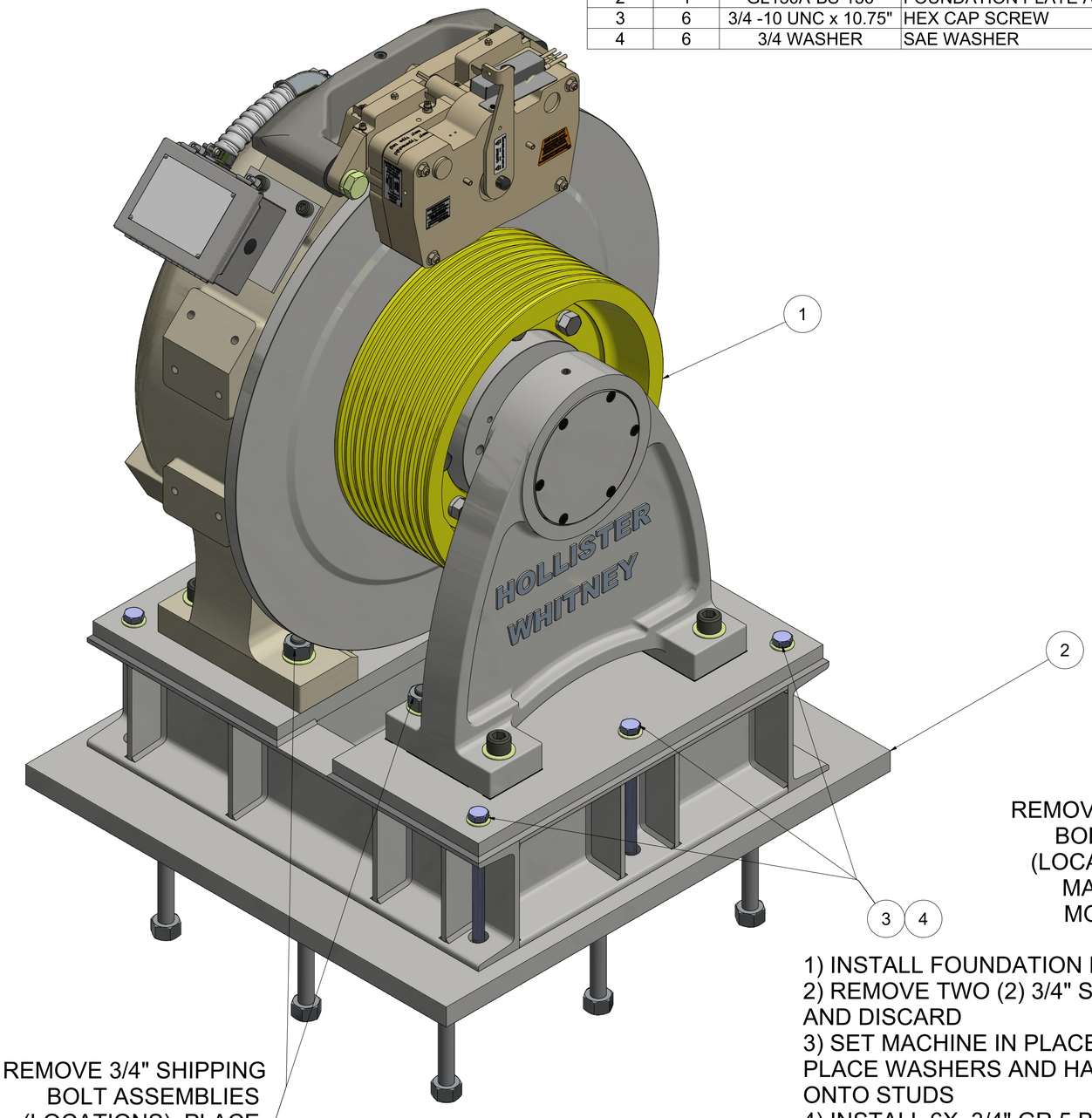

REMOVE 3/4" SHIPPING BOLT ASSEMBLIES (LOCATIONS), PLACE MACHINE OVER 1" MOUNTING STUDS

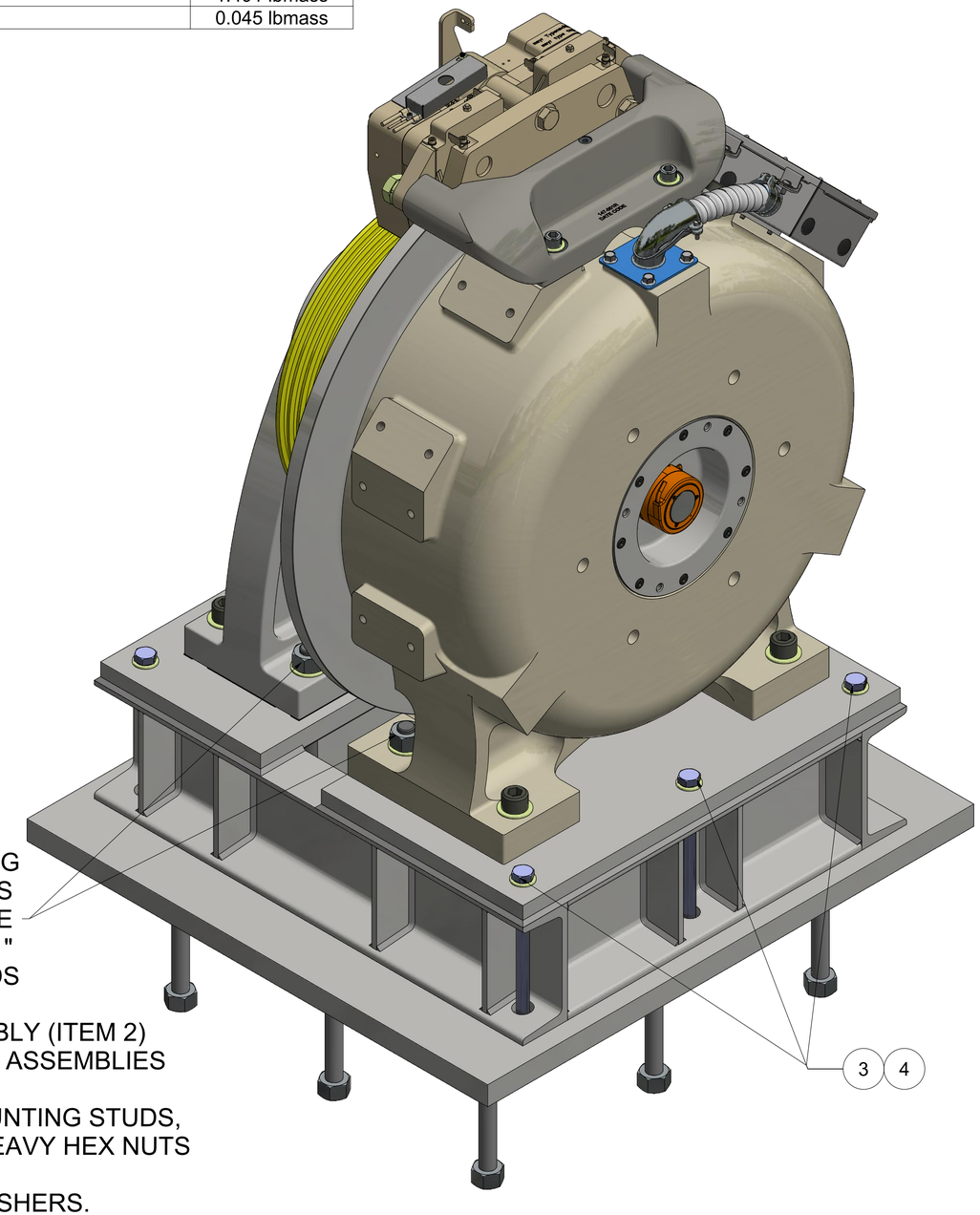

REMOVE 3/4" SHIPPING BOLT ASSEMBLIES (LOCATIONS), PLACE MACHINE OVER 1" MOUNTING STUDS

1) INSTALL FOUNDATION PLATE ASSEMBLY (ITEM 2)
2) REMOVE TWO (2) 3/4" SHIPPING BOLT ASSEMBLIES AND DISCARD
3) SET MACHINE IN PLACE OVER 1" MOUNTING STUDS, PLACE WASHERS AND HAND-SNUG 4 HEAVY HEX NUTS ONTO STUDS
4) INSTALL 6X 3/4" GR.5 BOLTS AND WASHERS.
5) TIGHTEN 4X 1" HEAVY HEX NUTS & 6X 3/4" BOLTS TO GRADE 5 STANDARDS (APPROX. 575 ft-lbs FOR 1" & 245 ft-lbs FOR 3/4")

PARTS LIST				
ITEM	QTY	PART NUMBER	DESCRIPTION	MASS
1	1	GL130A1-BS	GEARLESS MACHINE, 3125# CAP w/20" TW; 1:1 ROPED	3654.561 lbmass
2	1	GL130A-BS-156A	FOUNDATION ADAPTOR PLATE ASSEMBLY - GL130A BASEMENT SET	593.364 lbmass
3	6	3/4 -10 UNC x 10.75"	HEX CAP SCREW	1.491 lbmass
4	6	3/4 WASHER	SAE WASHER	0.045 lbmass

1) INSTALL FOUNDATION PLATE ASSEMBLY (ITEM 2)
2) REMOVE TWO (2) SHIPPING BOLT ASSEMBLIESS AND DISCARD
3) SET MACHINE IN PLACE OVER 1" MOUNTING STUDS, PLACE WASHERS AND HAND-SNUG 4 HEAVY HEX NUTS ONTO STUDS
4) INSTALL 6X 3/4" GR.5 BOLTS AND WASHERS.
5) TIGHTEN 4X 1" HEAVY HEX NUTS & 6X 3/4" BOLTS TO GRADE 5 STANDARDS (APPROX. 575 ft-lbs FOR 1" & 245 ft-lbs FOR 3/4")

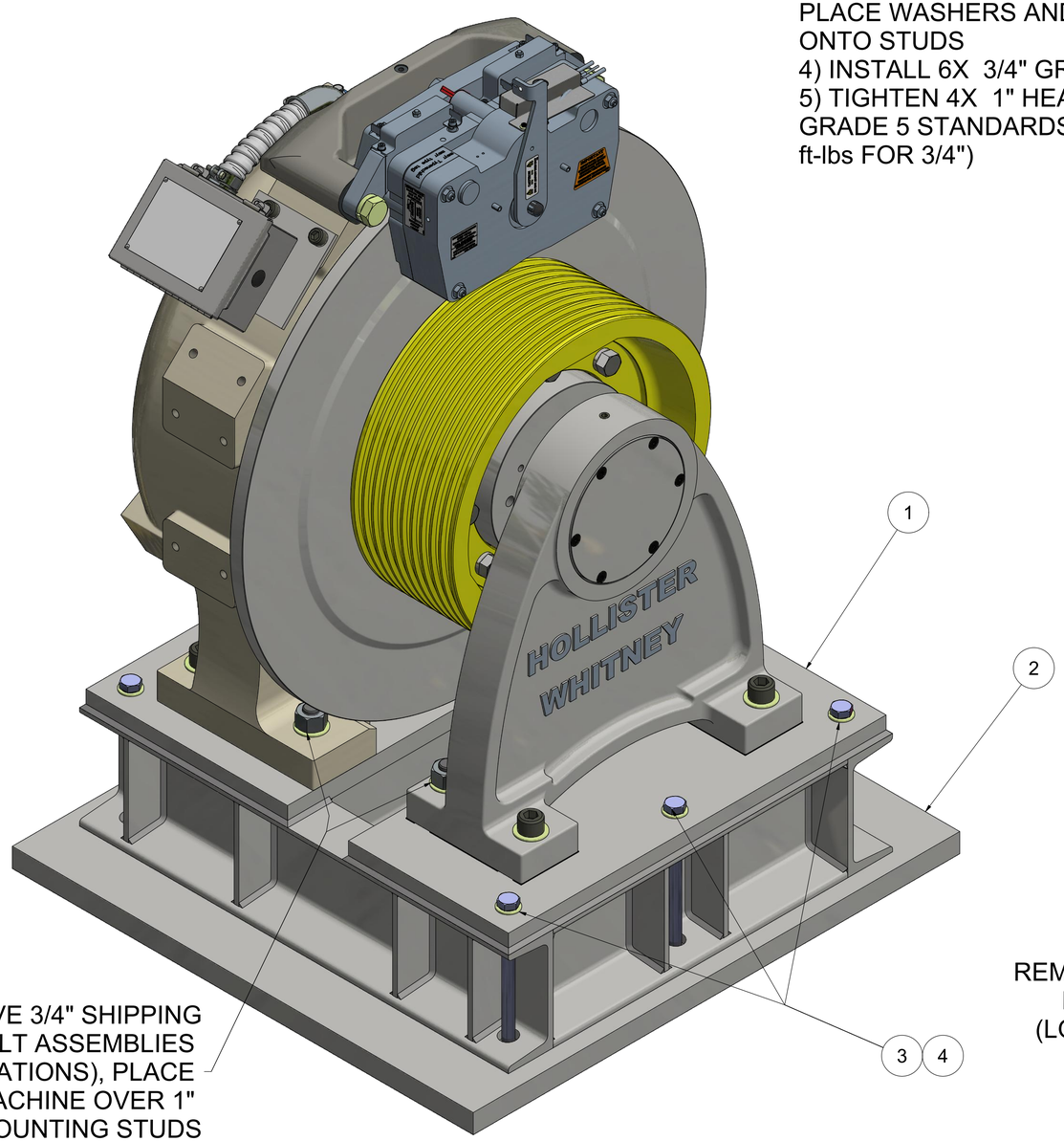

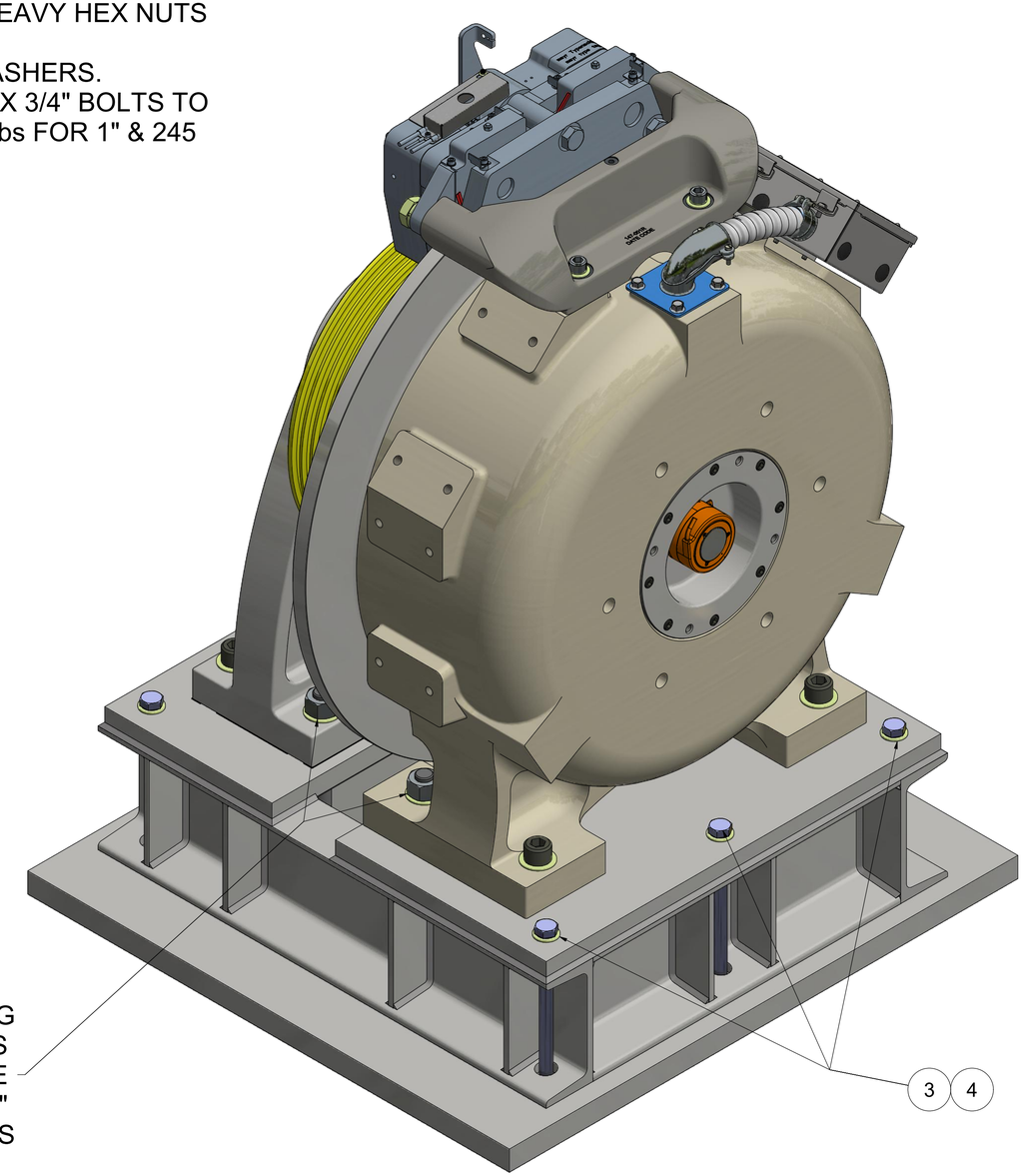

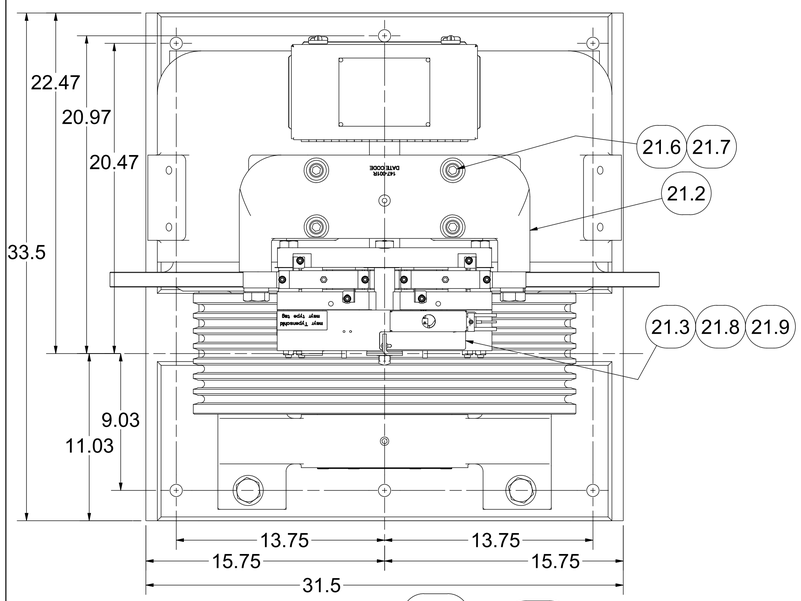

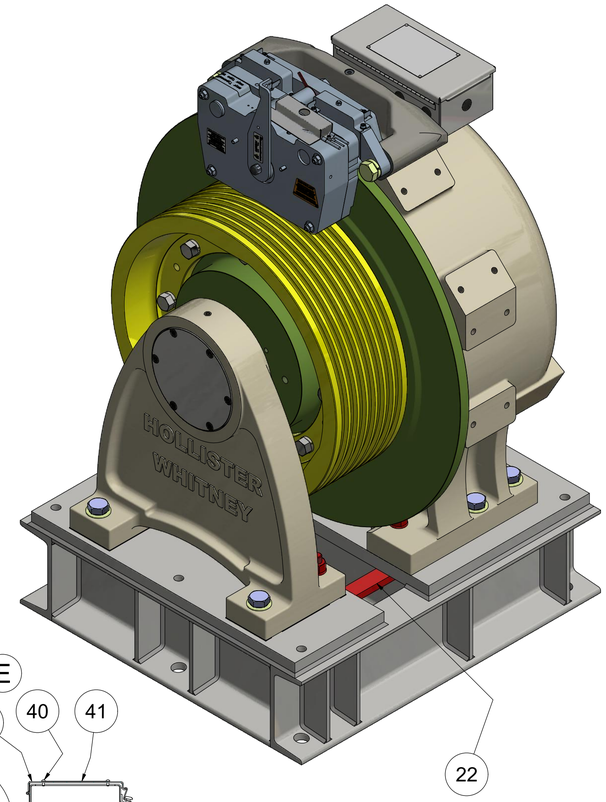

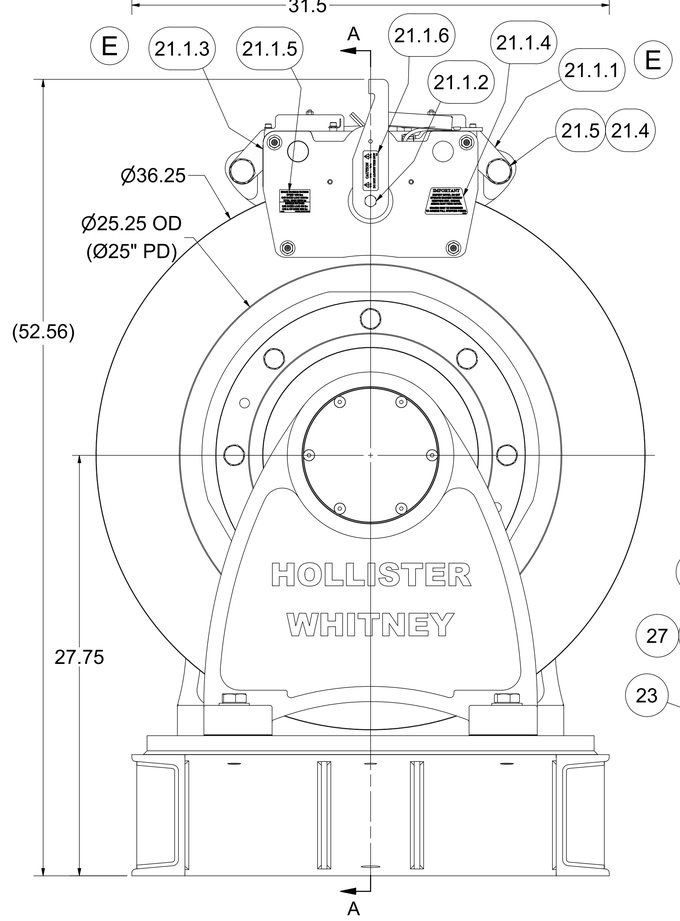

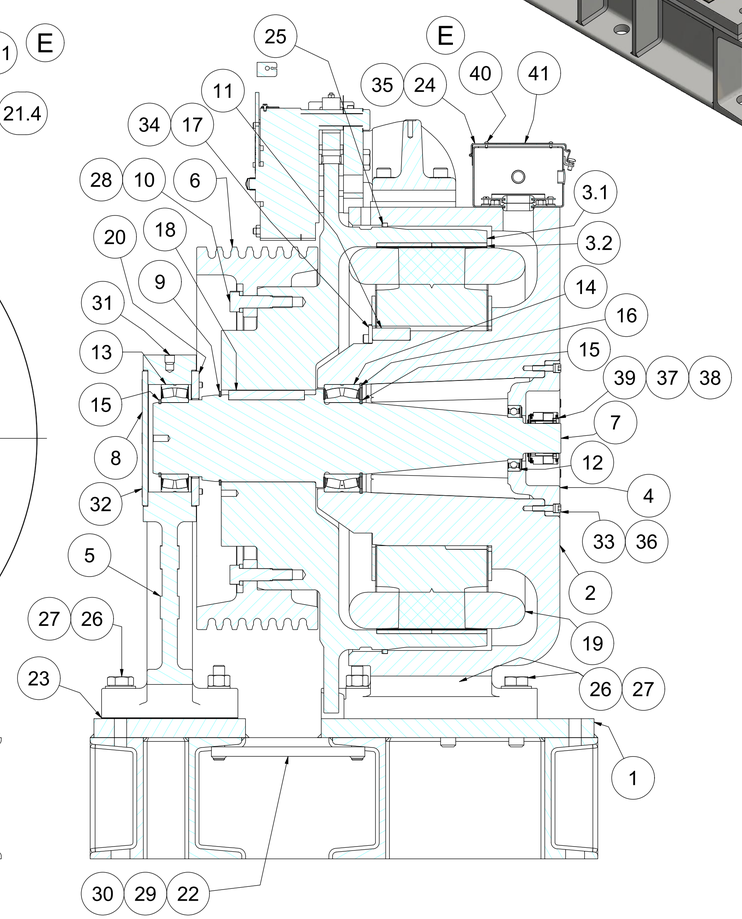

	ITEM	QTY	PART NUMBER	DESCRIPTION
	1	1	GL185BS-01	FINISHING BASE, BASEMENT SET, GL185
	2	1	GL185-001	BASE HOUSING, MOTOR #GL185
	3	1	GL185-002	ROTOR ASSEMBLY - MOTOR #GL185
	3.1	1	GL185-004	ROTOR
	3.2	80	GL185-099	PERMANENT MAGNET - MOTOR #GL185
	4	1	GL100-005	BEARING CAP
	5	1	GL185-006	OUTBOARD STAND, AC GEARLESS
	6	1	GL185-008	SHEAVE, 25"
	7	1	GL185-018	MAIN SHAFT - GL185 1:1 MACHINE
	8	1	GL185-019	END CAP
	9	1	GL185-020	RETAINING RING - ROTOR
	10	8	GL185-073	BODY BOLT
	11	1	GL100-088	KEY - STATOR CORE TO BASE
	12	1	GL185-089	BEARING, SEALED SINGLE ROW DEEP GROOVE BALL
	13	1	GL185-090	BEARING, SEALED SPHERICAL ROLLER
	14	1	GL185-091	BEARING, SEALED SPHERICAL ROLLER
	15	2	GL130-092	RETAINING RING - SHAFT
	16	1	GL100-093	RETAINING RING - HOUSING
D	17	3	GL100-094-1	CLAMP RING - STATOR ASSEMBLY
	18	1	GL185-095	KEY - MAIN SHAFT TO ROTOR
	19	1	GL185-100	WINDING ASSEMBLY - 40 POLE
	20	1	GL185-104	CAP
	21	1	GL185-147	DISC BRAKE (MAYR 10.1) ASSEMBLY
	21.1	1	GL185-147-115S	MAYR #10.1 BRAKE WITH STANDARD STICKERS
E	21.1.1	1	GL185-147-115	MAYR #10.1 BRAKE - RSD10/894.510.53S #8252206
	21.1.2	1	142-050	BLACK VINYL CAP
	21.1.3	1	P-175	TAG, GEARLESS MACHINE BRAKE AIRGAP DATA
	21.1.4	1	P-190	ROTOR INSPECTION & BRAKE BURNISHING STICKER
	21.1.5	1	P-214	TAG, GL130A, GL185 & GL260 - BRAKE RATINGS
	21.1.6	1	P-229	CAUTION LABEL - DO NOT ADJUST THIS NUT
	21.2	1	147-001	BRAKE BASE
	21.3	1	147-003	COVER - MAYR #10.1 ELECTRICAL
	21.4	2	1" WASHER	Helical Spring Lock Washers
	21.5	2	1-8 UNC - 3.5	Hex Cap Screw
	21.6	4	5/8 - 11 UNC x 2.5"	SOCKET HEAD CAP SCREW
	21.7	4	5/8 WASHER	STANDARD WASHER
	21.8	1	M4 x 0.7 x 8 mm	SHCS - METRIC
	21.9	1	#8 WASHER	STANDARD WASHER
	21.10	AS	143-026	BRAKE HOUSING SHIM - 0.03" (NOT SHOWN)
		NEC	143-027	BRAKE HOUSING SHIM - 0.06" (NOT SHOWN)
	22	2	GL185BS-156-5	SHIPPING BOLT
	23	AS	GL185-157-05	OUTBOARD STAND SHIM - 0.005" GL185 A-STAND, 25" T.W.
		NEC	GL185-157-10	OUTBOARD STAND SHIM - 0.010" GL185 A-STAND, 25" T.W.
			GL185-157-31	OUTBOARD STAND SHIM - 0.031" GL185 A-STAND, 25" T.W.
	24	1	GL185-159	HOFFMAN ELECTRICAL ENCLOSURE, A12064CH MODIFIED
	25	1	GL100-165-1	FELT DUST SEAL
	26	6	1 - 8 UNC x 4"	HEX HEAD CAP SCREW
	27	6	1" WASHER	SAE WASHER
	28	8	13/16 WASHER	HEAVY LOCK WASHER
	29	4	3/4 - 10 UNC	HEAVY HEX NUT
	30	4	3/4 WASHER	SAE WASHER
	31	1	5/8-11 UNC x 0.625	Hexagon Socket Set Screw - Flat Point
	32	6	3/8-16 UNC x 4	FLAT HEAD CAP SCREWS
	33	6	3/8 - 16 UNC x 1.5	SOCKET HEAD CAP SCREW
D	34	3	3/8 - 16 UNC x 1.25	SOCKET HEAD CAP SCREW
	35	4	3/8-16 UNC x 0.5	Hex Flange Screw - Regular Thread - Inch
	36	6	3/8 Washers	SHCS Lock Washers (High Collar)
D	37	4	#8 - 32 UNC - 1/4	Hexagon Socket Head Cap Screw
	38	4	#8 LOCK WASHER	EXT. TOOTH LOCK WASHER
	39	1	ECN 113 52810061	50mm HEIDENHAIN ENCODER
E	40	4	#6 U x 0.3125	DRIVE SCREW
	41	1	P-173	MOTOR TAG - PMAC GEARLESS MACHINE

MACHINE #	WINDING P/N	COIL/WINDING EFFICIENCY (%)	FRAME/MAGNET SIZE (mm)	VOLTAGE (Vac)	MACHINE SPEED (RPM)	CAR SPEED (fpm)
GL185-35L	GL185-170-350	90	185	170	53.5	350
GL185-35H	GL185-360-350	90	185	360	53.5	350
GL185-50L	GL185-170-500	90	185	170	76.4	500
GL185-50H	GL185-360-500	90	185	360	76.4	500
GL185-70L	GL185-170-700	90	185	170	107.0	700

WEIGHT: 4371.8 lbmass

			D	3X GL100-094-1 WAS 1X GL185-094, 3X 3/8x1.25	LTL 10/23/19
				SHCS WAS 6X, 6X 3/8 WASHER WAS 12X, &	
E	UPDATE BRAKE PARTS LIST & TAGS, PUR #1260	LTL 1/7/20		UPDATE GL185 (1:1) CAPACITIES, PUR #1111	

THIS DRAWING IS SUPPLIED AS A REPRESENTATION OF THE EQUIPMENT HOLLISTER-WHITNEY ELEVATOR CO. LLC ("MANUFACTURER") HAS AGREED TO SUPPLY. SLIGHT ADJUSTMENTS MAY OCCUR DURING MANUFACTURING AND INSTALLATION. ANY MODIFICATIONS NOT APPROVED IN WRITING BY MANUFACTURER MAY AFFECT OPERATION, VOIDS ANY WARRANTY AND RELEASES MANUFACTURER OF ALL LIABILITY.
THIS DOCUMENT CONTAINS CONFIDENTIAL AND PROPRIETARY INFORMATION THAT CANNOT BE REPRODUCED OR DIVULGED, IN WHOLE OR IN PART, WITHOUT WRITTEN AUTHORIZATION FROM THE MANUFACTURER.

THIRD ANGLE PROJECTION

HOLLISTER-WHITNEY
ELEVATOR CO. LLC

D

TITLE
GL185 W/25" T.W., 3500 LBS 50% CB MAX CAPACITY
1:1, BASEMENT SET ASSEMBLY

DRAWN BY	SCALE	MATERIAL	REFERENCE TOL.
LTL	1 / 5	SEE MATERIAL	ALL DIMENSIONS REFERENCE UNLESS OTHERWISE SPECIFIED
SHEET SIZE D		DATE 1/17/2014	GL185-BS

SHEET 1 OF 3

PARTS LIST				
ITEM	QTY	PART NUMBER	DESCRIPTION	MASS
1	1	GL185-BS	GEARLESS MACHINE (3000 LBS MAX CAPACITY); 1:1 ROPED	4375.447 lbmass
2	1	GL185BS-156	FOUNDATION PLATE ASSEMBLY - GL185 BASEMENT SET	619.197 lbmass
3	6	3/4 -10 UNC x 10.75"	HEX CAP SCREW	1.491 lbmass
4	6	3/4 WASHER	SAE WASHER	0.045 lbmass

1) INSTALL FOUNDATION PLATE ASSEMBLY (ITEM 2)
2) REMOVE TWO (2) SHIPPING BOLT ASSEMBLIESS AND DISCARD
3) SET MACHINE IN PLACE OVER 1" MOUNTING STUDS, PLACE WASHERS AND HAND-SNUG 4 HEAVY HEX NUTS ONTO STUDS
4) INSTALL 6X 3/4" GR.5 BOLTS AND WASHERS.
5) TIGHTEN 4X 1" HEAVY HEX NUTS & 6X 3/4" BOLTS TO GRADE 5 STANDARDS (APPROX. 575 ft-lbs FOR 1" & 245 ft-lbs FOR 3/4")

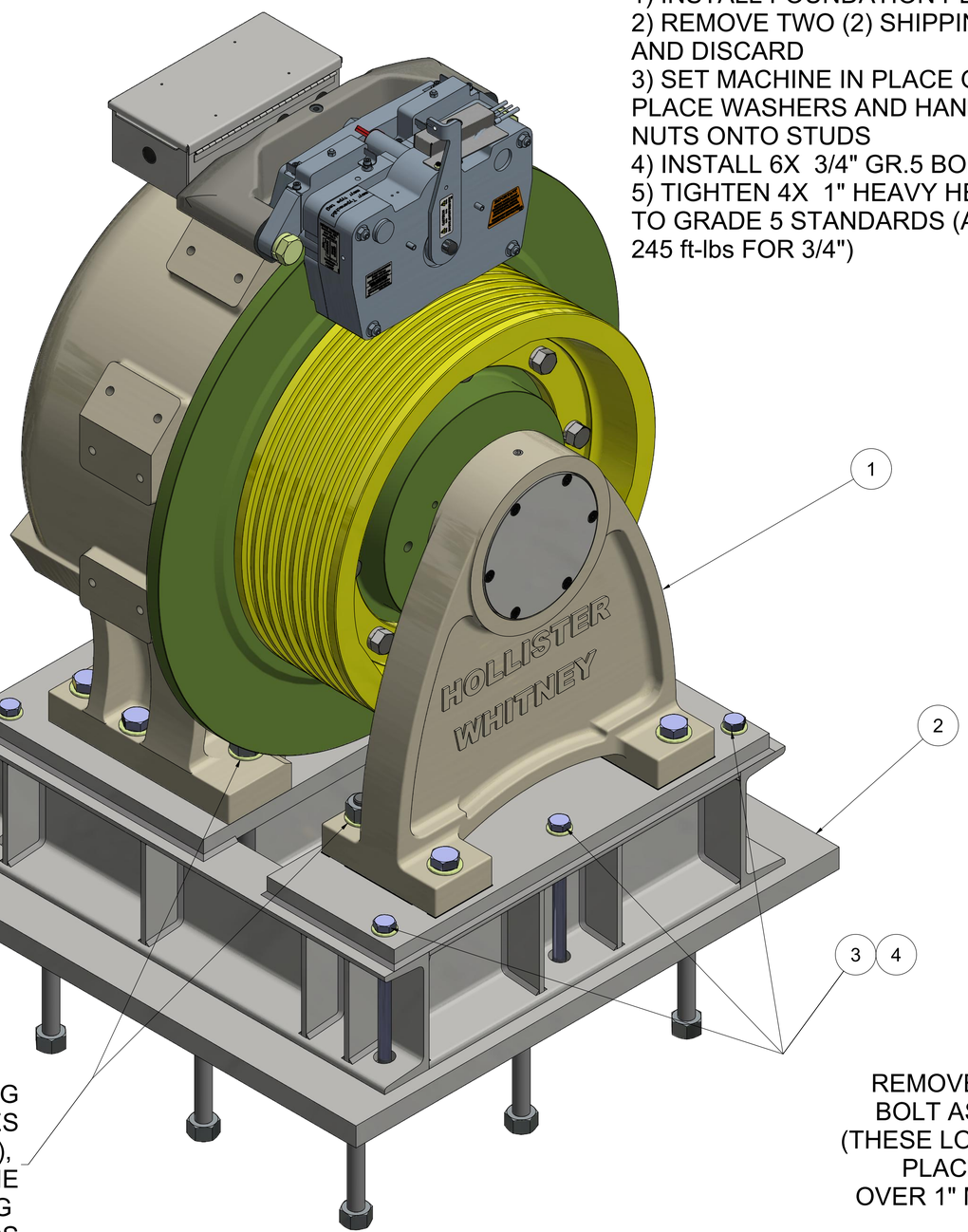

REMOVE SHIPPING BOLT ASSEMBLIES (THESE LOCATIONS), PLACE MACHINE OVER 1" MOUNTING STUDS

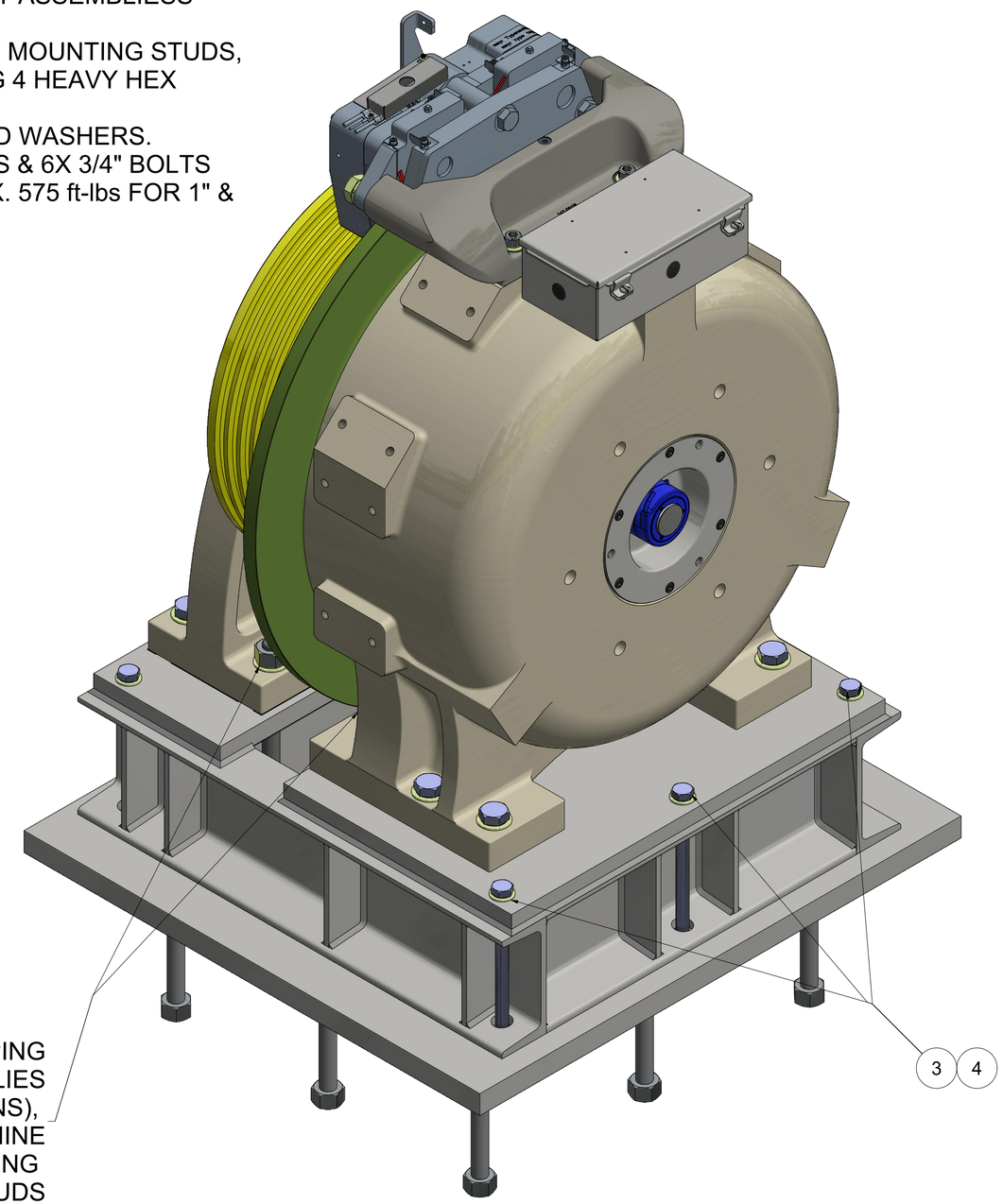

REMOVE SHIPPING BOLT ASSEMBLIES (THESE LOCATIONS), PLACE MACHINE OVER 1" MOUNTING STUDS

PARTS LIST				
ITEM	QTY	PART NUMBER	DESCRIPTION	MASS
1	1	GL185-BS	GEARLESS MACHINE (3000 LBS MAX CAPACITY); 1:1 ROPED	4375.447 lbmass
2	1	GL185BS-156A	FOUNDATION PLATE ASSEMBLY - GL185 BASEMENT SET	593.364 lbmass
3	6	3/4 -10 UNC x 10.75"	HEX CAP SCREW	1.491 lbmass
4	6	3/4 WASHER	SAE WASHER	0.045 lbmass

1) INSTALL FOUNDATION PLATE ASSEMBLY (ITEM 2)
2) REMOVE TWO (2) SHIPPING BOLT ASSEMBLIESS AND DISCARD
3) SET MACHINE IN PLACE OVER 1" MOUNTING STUDS, PLACE WASHERS AND HAND-SNUG 4 HEAVY HEX NUTS ONTO STUDS
4) INSTALL 6X 3/4" GR.5 BOLTS AND WASHERS.
5) TIGHTEN 4X 1" HEAVY HEX NUTS & 6X 3/4" BOLTS TO GRADE 5 STANDARDS (APPROX. 575 ft-lbs FOR 1" & 245 ft-lbs FOR 3/4")

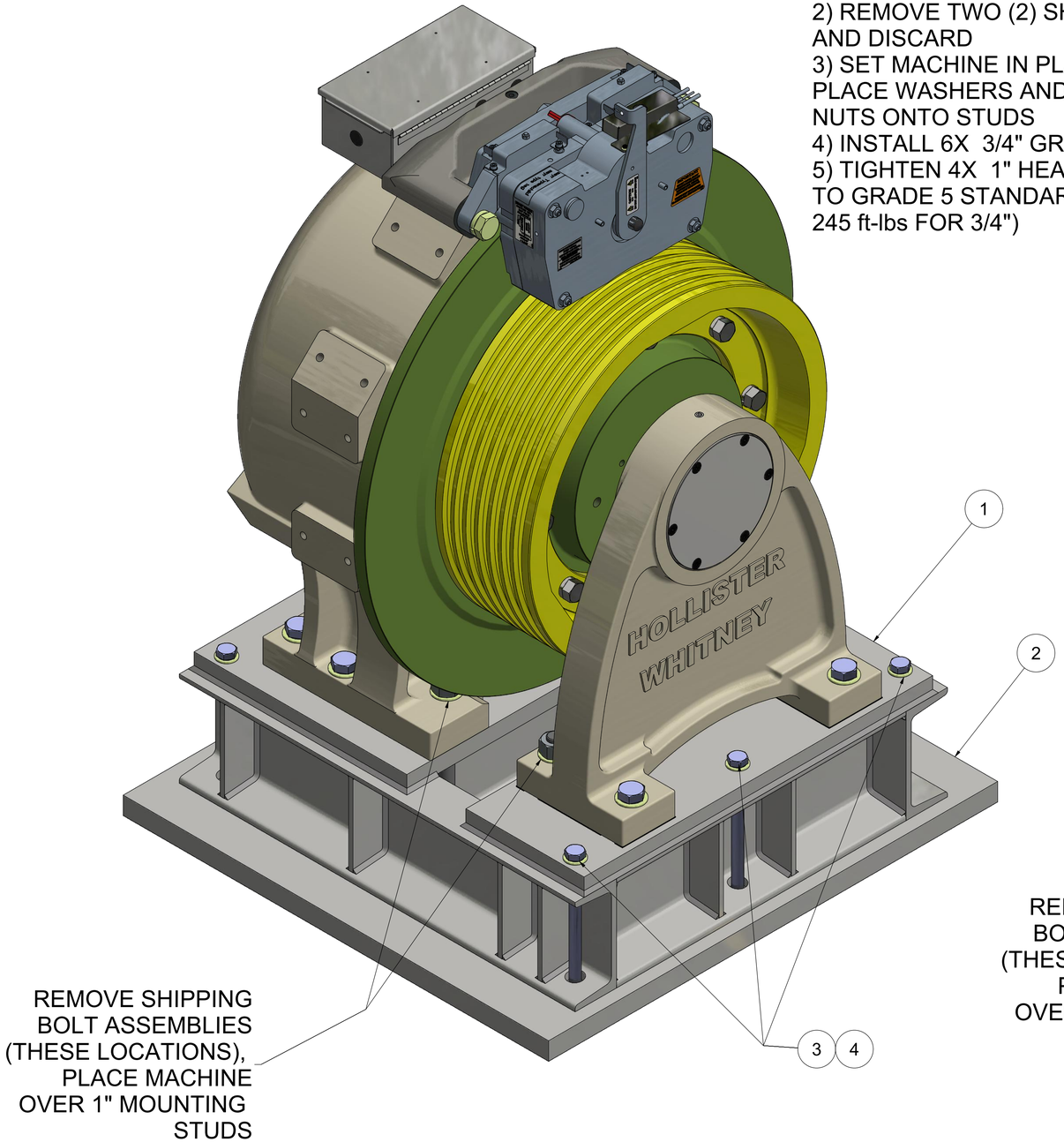

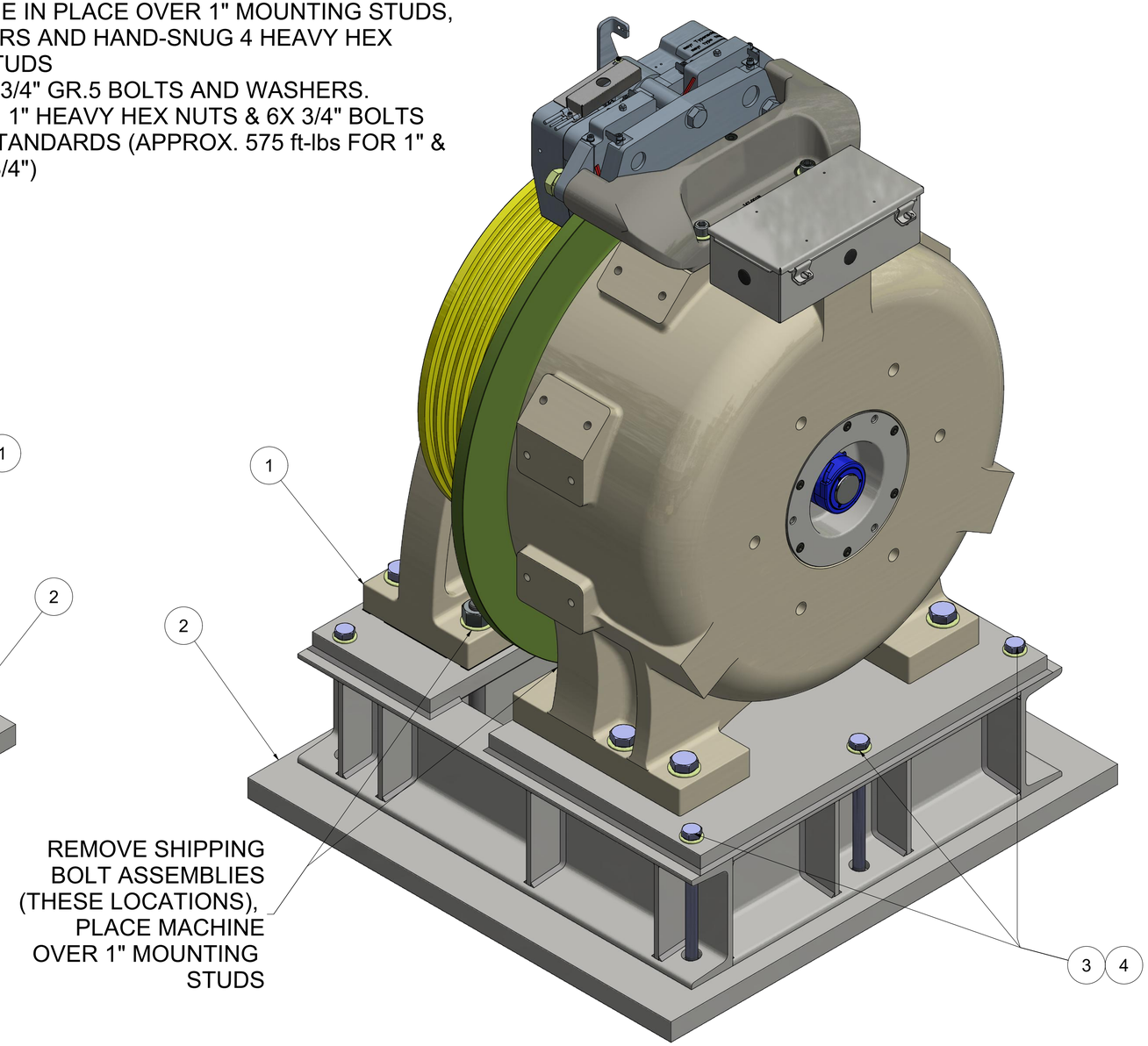

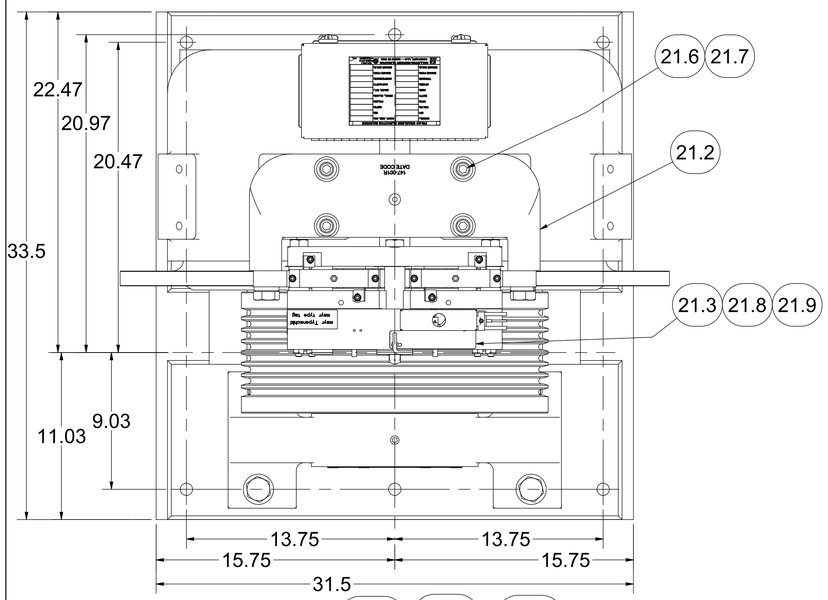

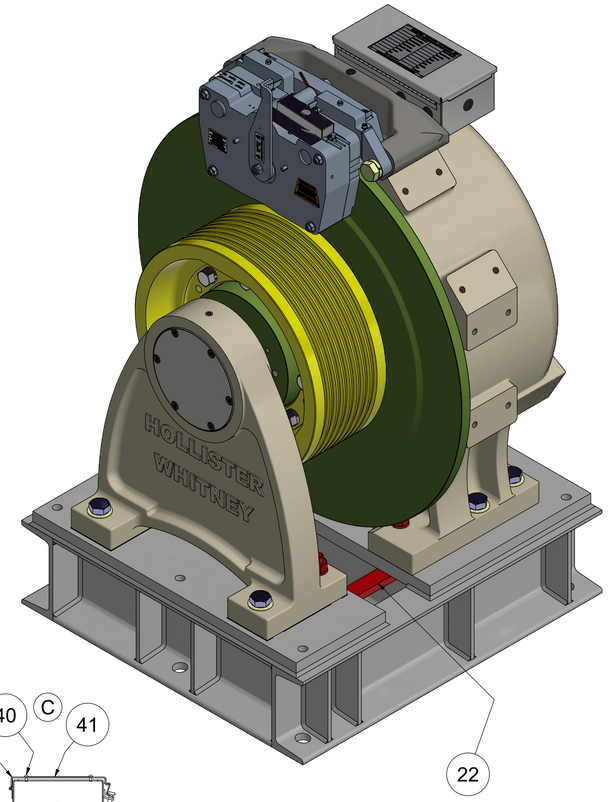

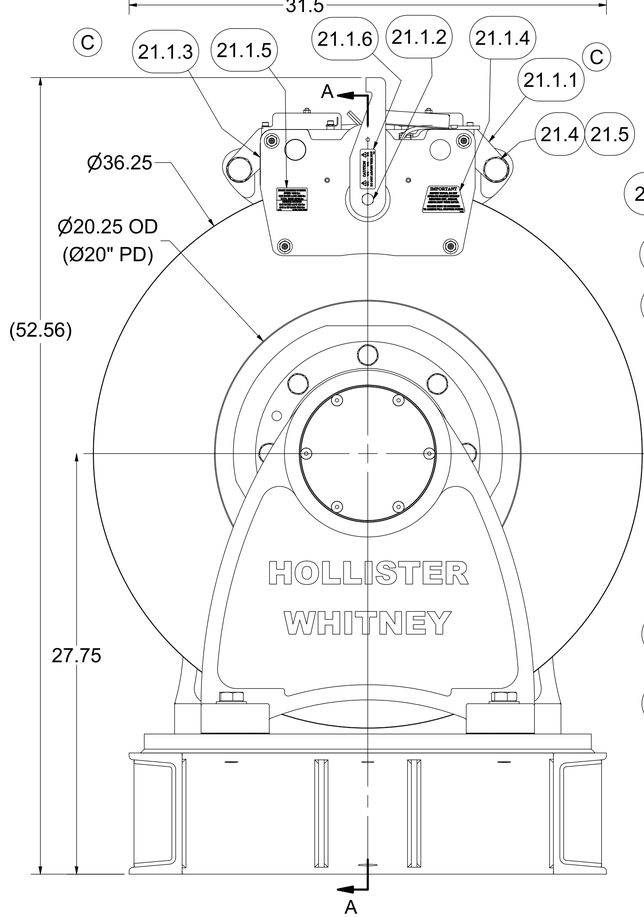

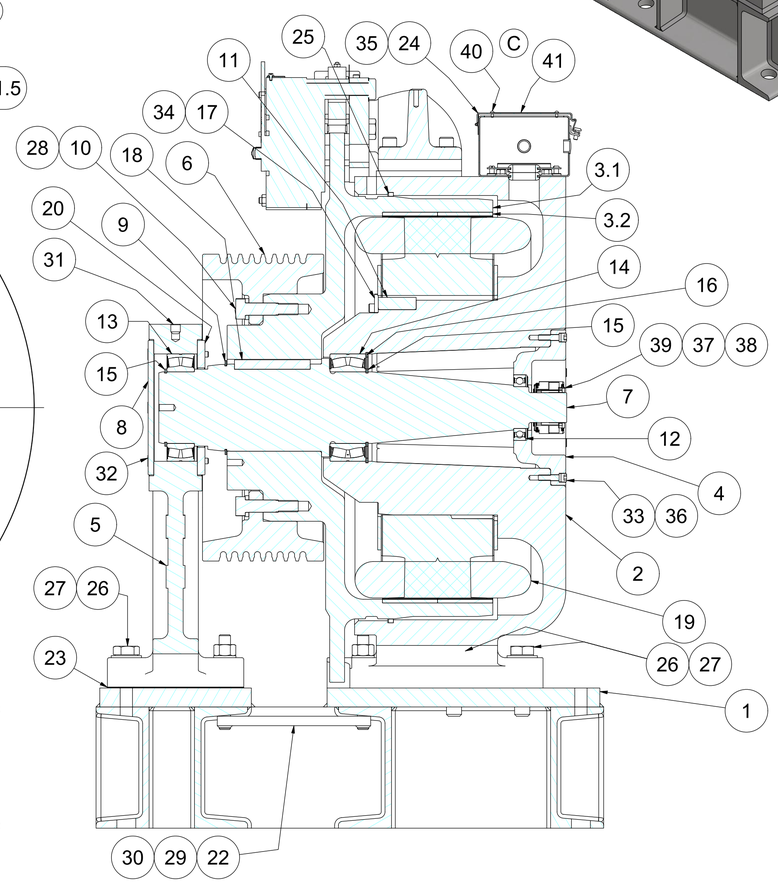

	ITEM	QTY	PART NUMBER	DESCRIPTION
	1	1	GL185BS-01	FINISHING BASE, BASEMENT SET, GL185
	2	1	GL185-001	BASE HOUSING, MOTOR #GL185
	3	1	GL185-002-1	ROTOR ASSEMBLY - 20" TW - MOTOR #GL185
	3.1	1	GL185-004-1	ROTOR - 20" TW
	3.2	80	GL185-099	PERMANENT MAGNET - MOTOR #GL185
	4	1	GL100-005	BEARING CAP
	5	1	GL185-006	OUTBOARD STAND, AC GEARLESS
	6	1	GL130A-008	20" TRACTION WHEEL
	7	1	GL185-018	MAIN SHAFT - GL185 1:1 MACHINE
	8	1	GL185-019	END CAP
	9	1	GL185-020	RETAINING RING - ROTOR
	10	8	GL185-073	BODY BOLT
	11	1	GL100-088	KEY - STATOR CORE TO BASE
	12	1	GL185-089	BEARING, SEALED SINGLE ROW DEEP GROOVE BALL
	13	1	GL185-090	BEARING, SEALED SPHERICAL ROLLER
	14	1	GL185-091	BEARING, SEALED SPHERICAL ROLLER
	15	2	GL130-092	RETAINING RING - SHAFT
	16	1	GL100-093	RETAINING RING - HOUSING
	17	3	GL100-094-1	CLAMP RING - STATOR ASSEMBLY
	18	1	GL185-095	KEY - MAIN SHAFT TO ROTOR
	19	1	GL185-100	WINDING ASSEMBLY - 40 POLE
	20	1	GL185-104	CAP
B	21	1	GL185-147	DISC BRAKE (MAYR 10.1) ASSEMBLY
	21.1	1	GL185-147-115S	MAYR #10.1 BRAKE WITH STANDARD STICKERS
C	21.1.1	1	GL185-147-115	MAYR #10.1 BRAKE - RSD10/894.510.53S #8252206
	21.1.2	1	142-050	BLACK VINYL CAP
	21.1.3	1	P-175	TAG, GEARLESS MACHINE BRAKE AIRGAP DATA
	21.1.4	1	P-190	ROTOR INSPECTION & BRAKE BURNISHING STICKER
	21.1.5	1	P-214	TAG, GL130A, GL185 & GL260 - BRAKE RATINGS
	21.1.6	1	P-229	CAUTION LABEL - DO NOT ADJUST THIS NUT
	21.2	1	147-001	BRAKE BASE - LARGE FRAME GL MACHINE
	21.3	1	147-003	COVER - MAYR #10.1 (GL185-147) ELECTRICAL
	21.4	2	1" - 8 UNC x 3 1/2"	HEX CAP SCREW
	21.5	2	1" WASHER	STANDARD LOCK WASHER
	21.6	4	5/8-11 UNC x 2.5	SOCKET HEAD CAP SCREW
	21.7	4	5/8 WASHER	STANDARD WASHER
	21.8	1	M4 x 0.7 x 8mm	SOCKET HEAD CAP SCREW (METRIC)
	21.9	1	#8 WASHER	STANDARD WASHER
	21.10	AS NEC	143-026	BRAKE HOUSING SHIM - 0.03" (NOT SHOWN)
			143-027	BRAKE HOUSING SHIM - 0.06" (NOT SHOWN)
	22	2	GL185BS-156-5	SHIPPING BOLT
	23	AS NEC	GL185-157-05	OUTBOARD STAND SHIM - 0.005"
			GL185-157-10	OUTBOARD STAND SHIM - 0.010"
			GL185-157-31	OUTBOARD STAND SHIM - 0.031"
	24	1	GL185-159	HOFFMAN ELECTRICAL ENCLOSURE, A12064CH MODIFIED
	25	1	GL100-165-1	FELT DUST SEAL
	26	6	1 - 8 UNC x 4"	HEX HEAD CAP SCREW
	27	6	1" WASHER	SAE WASHER
	28	8	13/16 WASHER	HEAVY LOCK WASHER
	29	4	3/4 - 10 UNC	HEAVY HEX NUT
	30	4	3/4 WASHER	SAE WASHER
	31	1	5/8-11 UNC x 0.625	Hexagon Socket Set Screw - Flat Point
	32	6	3/8-16 UNC x 4	FLAT HEAD CAP SCREWS
	33	6	3/8 - 16 UNC x 1.5	SOCKET HEAD CAP SCREW
	34	3	3/8 - 16 UNC x 1.25	SOCKET HEAD CAP SCREW
	35	4	3/8-16 UNC x 0.5	Hex Flange Screw - Regular Thread - Inch
	36	6	3/8 Washers	Lock Washers (Inch Series) High-Collar Helical Spring Lock Washers
	37	4	#8 - 32 UNC - 1/4	Hexagon Socket Head Cap Screw
	38	4	#8 Washer	Ext. Tooth Lock Washer
	39	1	ECN 113 52810061	50mm HEIDENHAIN ENCODER
C	40	4	#6 U x 0.3125	DRIVE SCREW
	41	1	P-173	MOTOR TAG - PMAC GEARLESS MACHINE

MACHINE #	WINDING P/N	COIL/WINDING EFFICIENCY (%)	FRAME/MAGNET SIZE (mm)	VOLTAGE (Vac)	MACHINE SPEED (RPM)	CAR SPEED (fpm)
GL185-35L	GL185-170-350	90	185	170	53.48	280
GL185-35H	GL185-360-350	90	185	360	53.48	280
GL185-50L	GL185-170-500	90	185	170	76.39	400
GL185-50H	GL185-360-500	90	185	360	76.39	400
GL185-70L	GL185-170-700	90	185	170	106.95	560

WEIGHT: 4111.7 lbmass

			C	UPDATE BRAKE PARTS LIST & TAGS, PUR #1260	LTL 1/7/20
			B	GL185-147 BRAKE # CORRECTED, PUR #1238	LTL 11/21/19
D	CORRECT CAPACITY TYPO PG 2 &3, PUR#1617	LTL 1/7/20	A	PRODUCTION RELEASE, PUR #1111	LTL 10/23/19

HOLLISTER-WHITNEY
ELEVATOR CO. LLC

TITLE: GL185 W/20" T.W., 4375 LBS 50% CB MAX CAPACITY 1:1, BASEMENT SET ASSEMBLY

THIS DRAWING IS SUPPLIED AS A REPRESENTATION OF THE EQUIPMENT HOLLISTER-WHITNEY ELEVATOR CO. LLC ("MANUFACTURER") HAS AGREED TO SUPPLY. SLIGHT ADJUSTMENTS MAY OCCUR DURING MANUFACTURING AND INSTALLATION. ANY MODIFICATIONS NOT APPROVED IN WRITING BY MANUFACTURER MAY AFFECT OPERATION, VOIDS ANY WARRANTY AND RELEASES MANUFACTURER OF ALL LIABILITY.
THIS DOCUMENT CONTAINS CONFIDENTIAL AND PROPRIETARY INFORMATION THAT CANNOT BE REPRODUCED OR DIVULGED, IN WHOLE OR IN PART, WITHOUT WRITTEN AUTHORIZATION FROM THE MANUFACTURER.

THIRD ANGLE PROJECTION

DRAWN BY	SCALE	MATERIAL	REFERENCE TOL.
LTL	1 / 5	SEE PARTS LIST	ALL DIMENSIONS REFERENCE UNLESS OTHERWISE SPECIFIED

SHEET SIZE	DATE	
D	10/27/2014	GL186-BS SHEET 1 OF 3

D

PARTS LIST				
ITEM	QTY	PART NUMBER	DESCRIPTION	MASS
1	1	GL186BS	GEARLESS MACHINE (4375 LBS MAX CAPACITY); 1:1 ROPED	4102.586 lbmass
2	1	GL185BS-156	FOUNDATION PLATE ASSEMBLY - GL185 BASEMENT SET	619.197 lbmass
3	6	3/4" - 10 UNC x 10 3/4"	HEX CAP SCREW	1.491 lbmass
4	6	3/4 WASHER	SAE WASHER	0.045 lbmass

1) INSTALL FOUNDATION PLATE ASSEMBLY (ITEM 2)
2) REMOVE TWO (2) SHIPPING BOLT ASSEMBLIESS AND DISCARD
3) SET MACHINE IN PLACE OVER 1" MOUNTING STUDS, PLACE WASHERS AND HAND-SNUG 4 HEAVY HEX NUTS ONTO STUDS
4) INSTALL 6X 3/4" GR.5 BOLTS AND WASHERS.
5) TIGHTEN 4X 1" HEAVY HEX NUTS & 6X 3/4" BOLTS TO GRADE 5 STANDARDS (APPROX. 575 ft-lbs FOR 1" & 245 ft-lbs FOR 3/4")

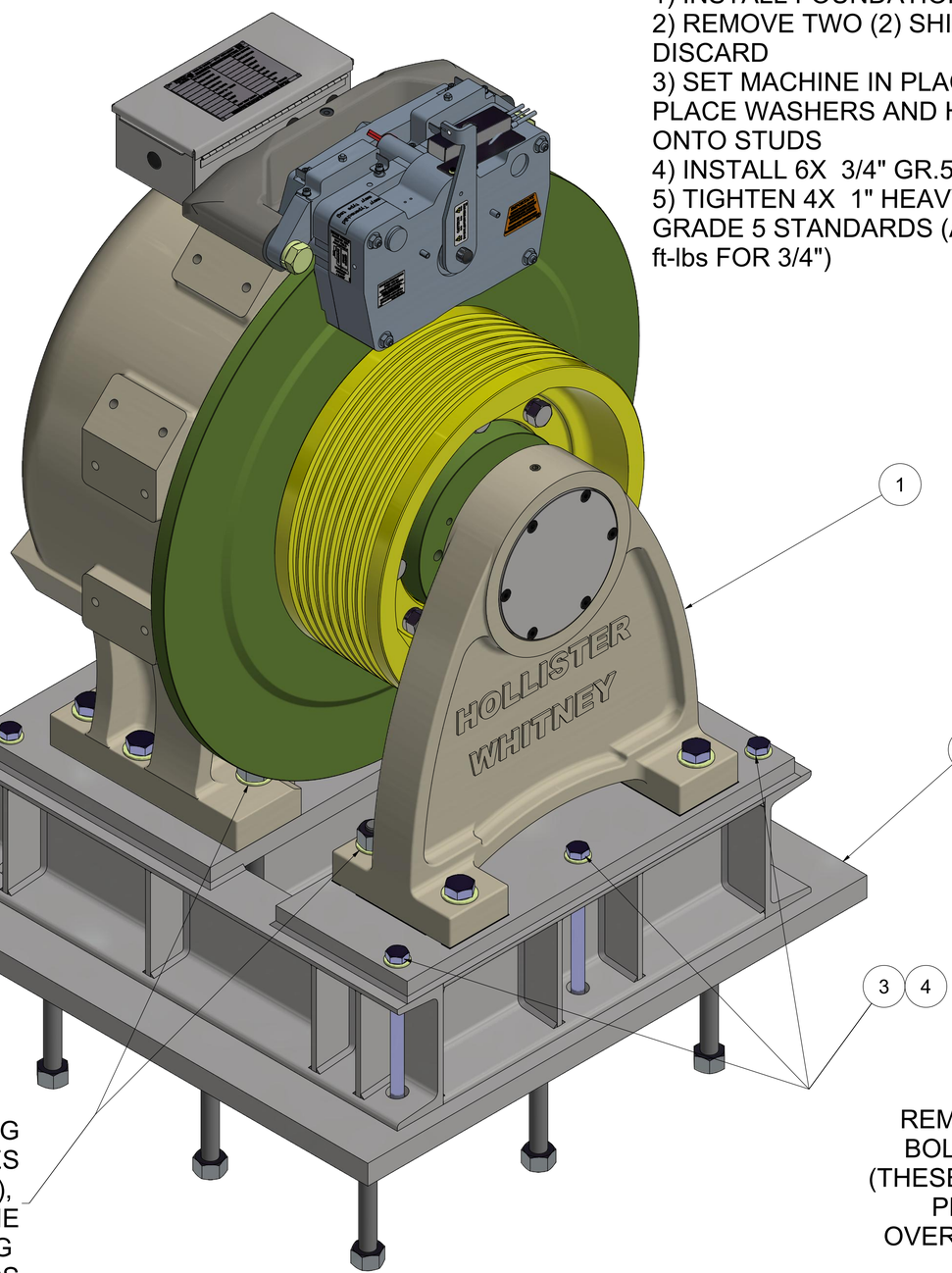

REMOVE SHIPPING BOLT ASSEMBLIES (THESE LOCATIONS), PLACE MACHINE OVER 1" MOUNTING STUDS

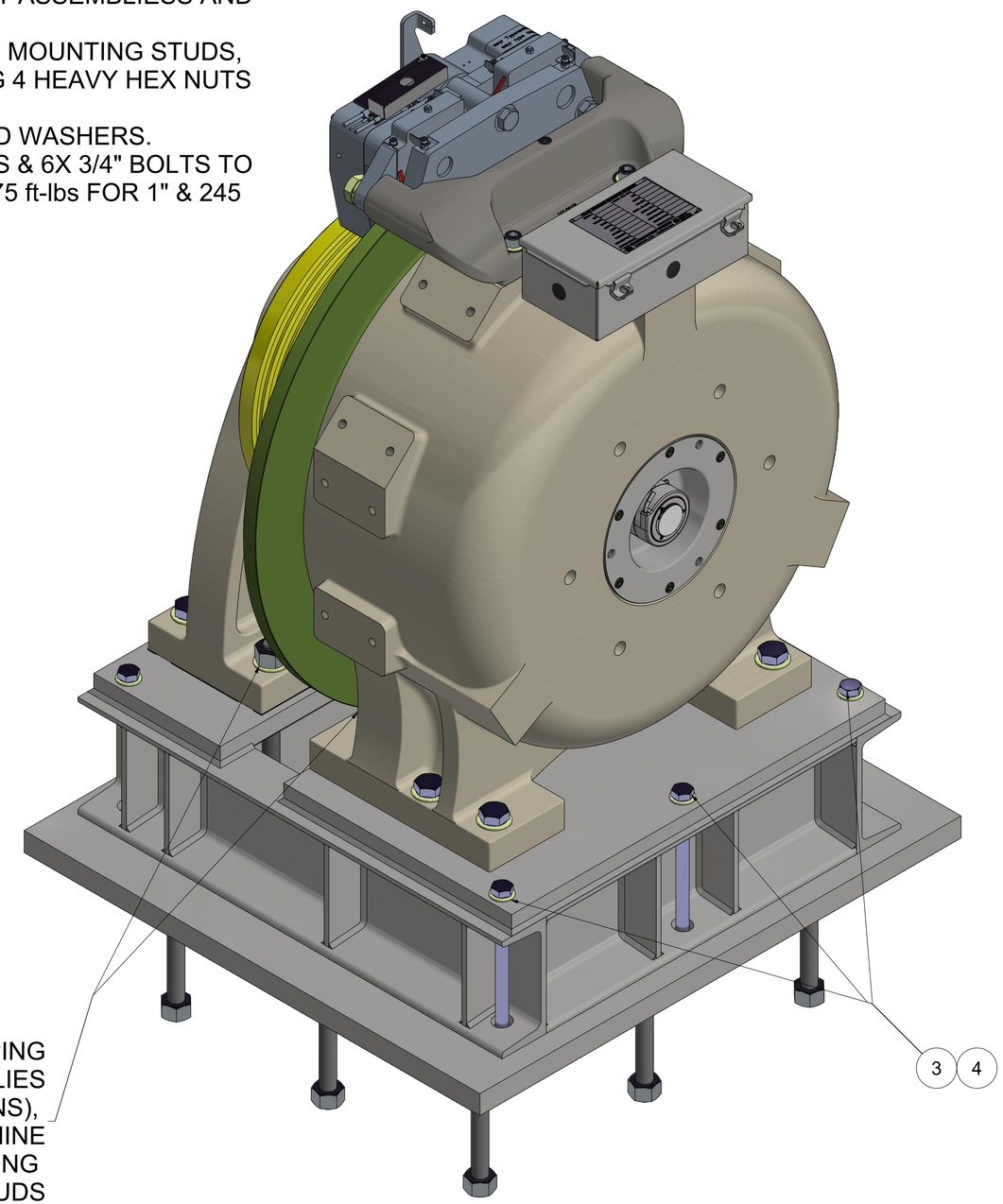

REMOVE SHIPPING BOLT ASSEMBLIES (THESE LOCATIONS), PLACE MACHINE OVER 1" MOUNTING STUDS

D

PARTS LIST				
ITEM	QTY	PART NUMBER	DESCRIPTION	MASS
1	1	GL186BS	GEARLESS MACHINE (4375 LBS MAX CAPACITY); 1:1 ROPED	4102.586 lbmass
2	1	GL185BS-156A	FOUNDATION PLATE ASSEMBLY - GL185 BASEMENT SET	593.364 lbmass
3	6	3/4" - 10 UNC x 10 3/4"	HEX CAP SCREW	1.491 lbmass
4	6	3/4 WASHER	SAE WASHER	0.045 lbmass

1) INSTALL FOUNDATION PLATE ASSEMBLY (ITEM 2)
2) REMOVE TWO (2) SHIPPING BOLT ASSEMBLIESS AND DISCARD
3) SET MACHINE IN PLACE OVER 1" MOUNTING STUDS, PLACE WASHERS AND HAND-SNUG 4 HEAVY HEX NUTS ONTO STUDS
4) INSTALL 6X 3/4" GR.5 BOLTS AND WASHERS.
5) TIGHTEN 4X 1" HEAVY HEX NUTS & 6X 3/4" BOLTS TO GRADE 5 STANDARDS (APPROX. 575 ft-lbs FOR 1" & 245 ft-lbs FOR 3/4")

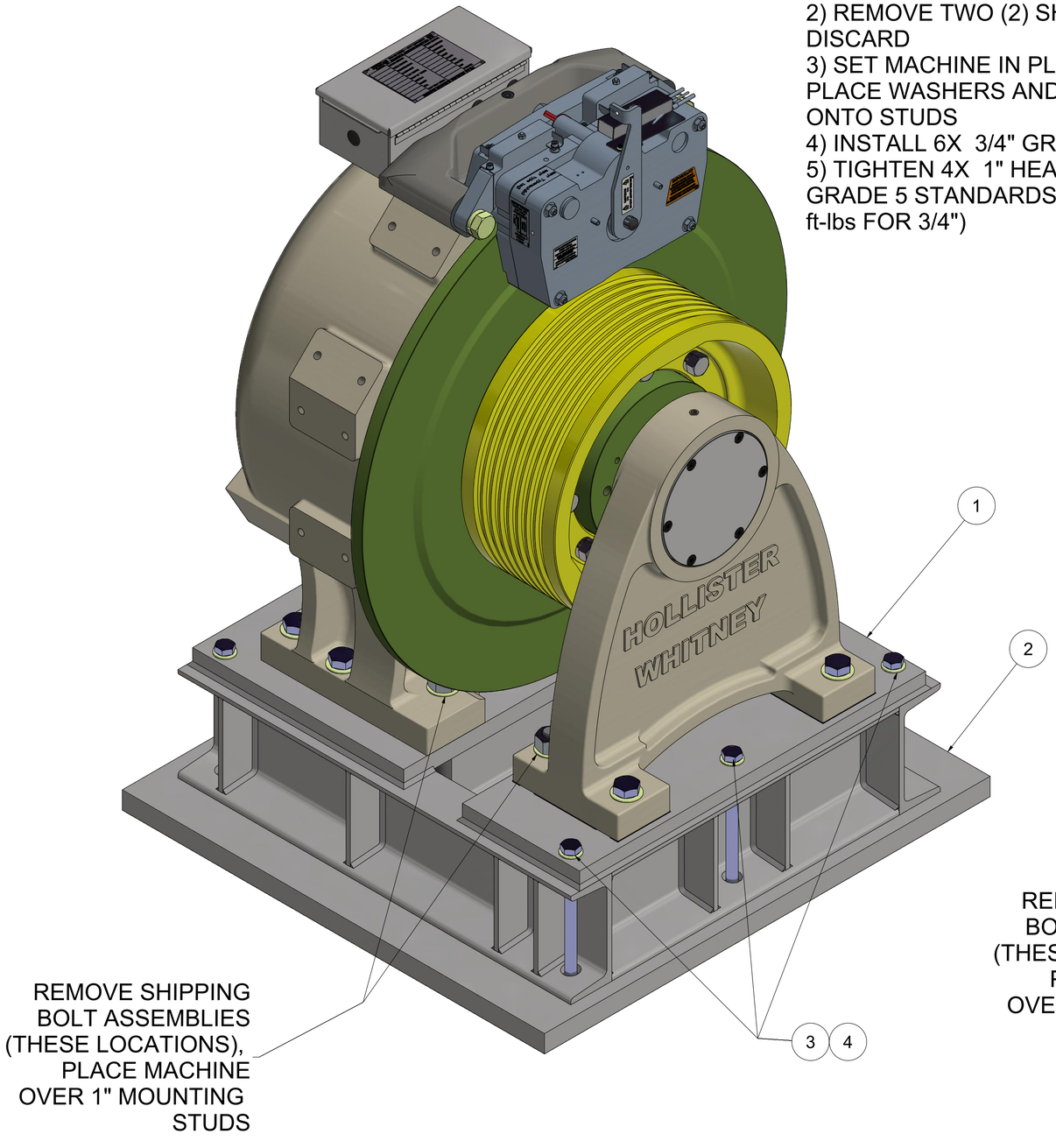

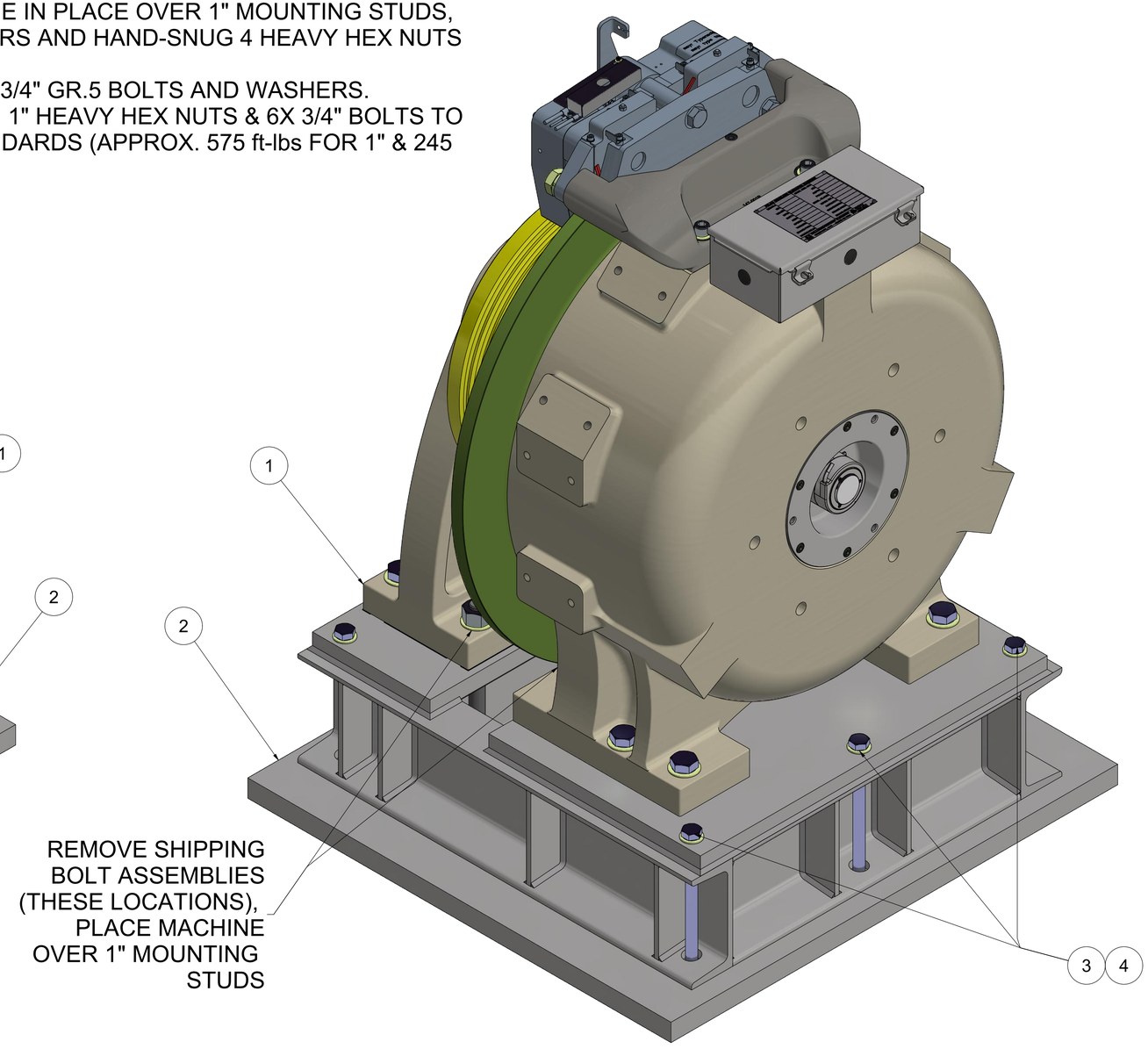

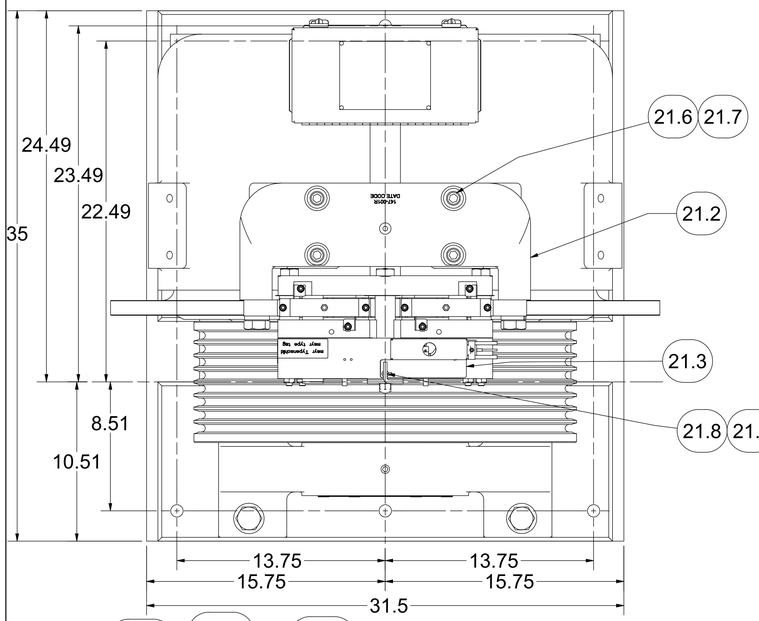

25" SHEAVE
4500# CAP. MAX @ 50%

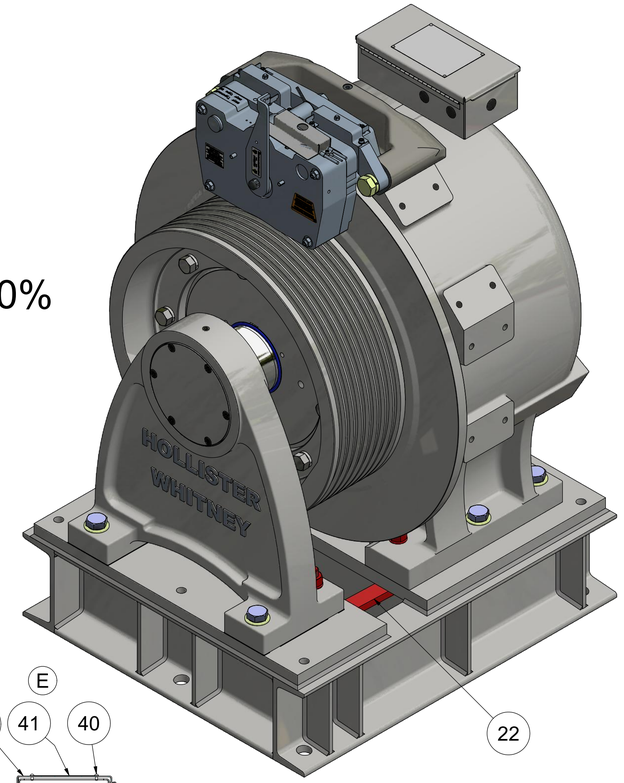

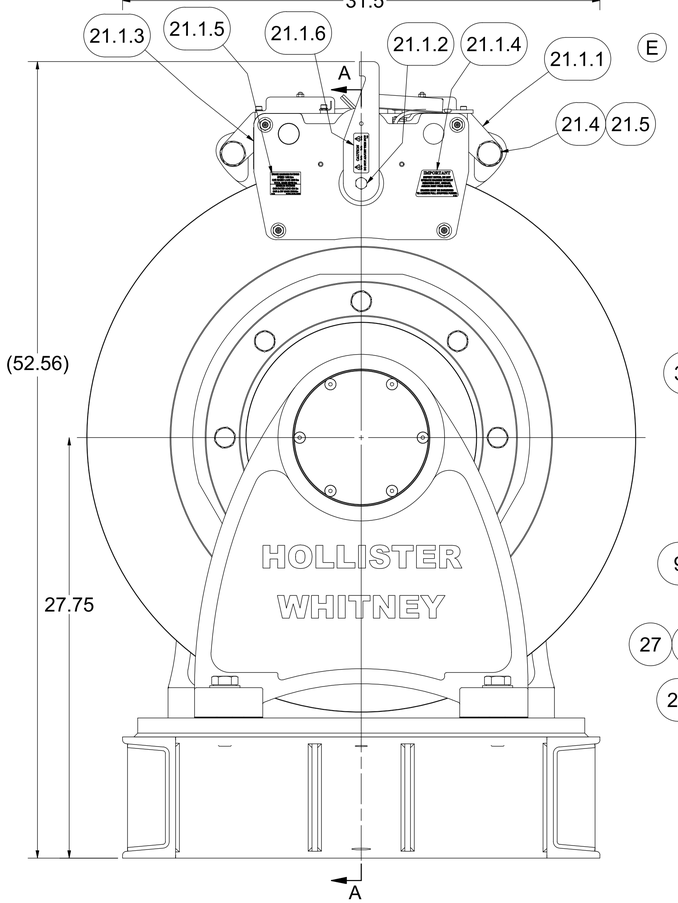

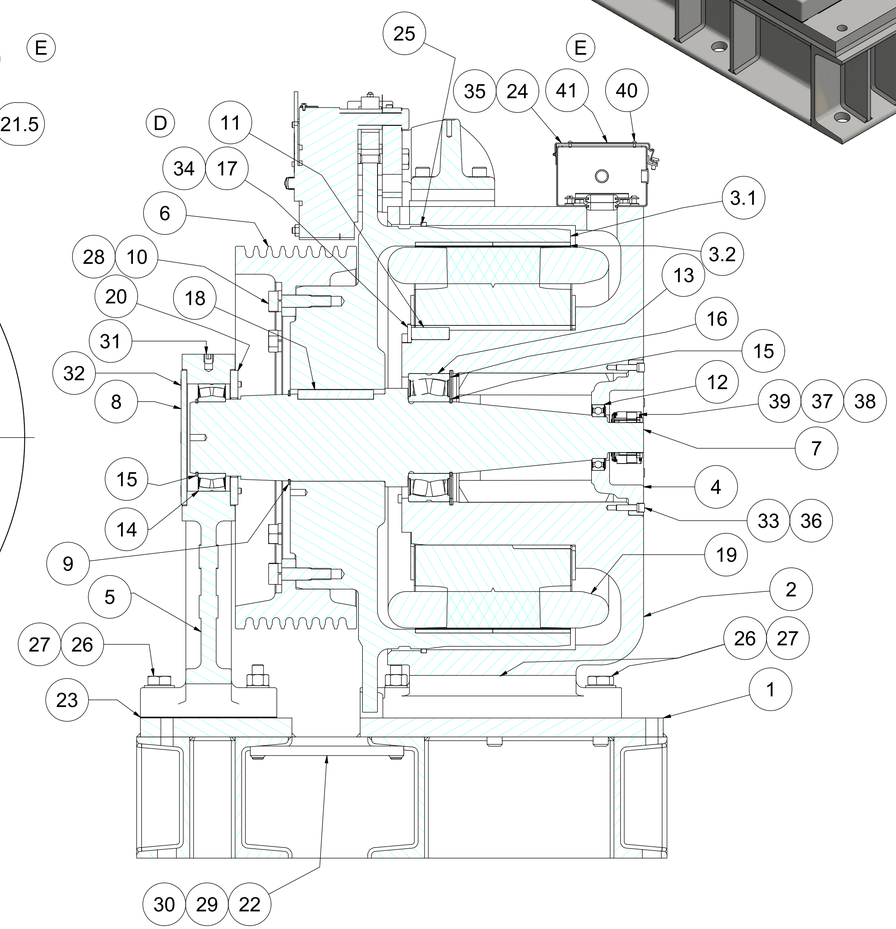

	ITEM	QTY	PART NUMBER	DESCRIPTION
	1	1	GL260BS-01	FINISHING BASE, BASEMENT SET, GL260
	2	1	GL260-001	BASE HOUSING, MOTOR #GL260
	3	1	GL260-002	ROTOR ASSEMBLY - MOTOR #GL260
	3.1	1	GL260-004	ROTOR
	3.2	80	GL260-099	PERMANENT MAGNET - #GL260 & GL130A MOTORS
	4	1	GL260-005	BEARING CAP
	5	1	GL185-006	OUTBOARD STAND, AC GEARLESS
	6	1	GL185-008	TRACTION SHEAVE, 25"
	7	1	GL260-018	MAIN SHAFT
	8	1	GL185-019	END CAP
	9	1	GL185-020	RETAINING RING - ROTOR
	10	8	GL185-073	BODY BOLT
	11	1	GL100-088	KEY - STATOR CORE TO BASE
	12	1	GL185-089	BEARING, SEALED SINGLE ROW DEEP GROOVE BALL
	13	1	GL130-090	SEALED SPHERICAL ROLLER BEARING
	14	1	GL185-090	BEARING, SEALED SPHERICAL ROLLER
	15	2	GL130-092	RETAINING RING - SHAFT
	16	1	GL130-093	RETAINING RING - HOUSING
D	17	3	GL100-094-1	CLAMP - STATOR ASSEMBLY
	18	1	GL185-095	KEY - MAIN SHAFT TO ROTOR
	19	1	GL260-100	WINDING ASSEMBLY - 40 POLE
	20	1	GL185-104	CAP
	21	1	GL185-147	DISC BRAKE (MAYR 10.1) ASSEMBLY
	21.1	1	GL185-147-115S	MAYR #10.1 BRAKE WITH STANDARD STICKERS
E	21.1.1	1	GL185-147-115	MAYR #10.1 BRAKE - RSD10/894.510.53S #8252206
	21.1.2	1	142-050	BLACK VINYL CAP
	21.1.3	1	P-175	TAG, GEARLESS MACHINE BRAKE AIRGAP DATA
	21.1.4	1	P-190	ROTOR INSPECTION & BRAKE BURNISHING STICKER
	21.1.5	1	P-214	TAG, GL130A, GL185 & GL260 - BRAKE RATINGS
	21.1.6	1	P-229	CAUTION LABEL - DO NOT ADJUST THIS NUT
	21.2	1	147-001	BRAKE BASE
	21.3	1	147-003	COVER - MAYR #10.1 ELECTRICAL
	21.4	2	1-8 UNC - 3.25	Hex Cap Screw
	21.5	2	1 WASHER	Helical Spring Lock Washers
	21.6	4	5/8 - 11 UNC x 2.5"	SOCKET HEAD CAP SCREW
	21.7	4	5/8 WASHER	STANDARD WASHER
	21.8	1	M4 x 0.7 x 8 mm	SHCS - METRIC
	21.9	1	#8 WASHER	STANDARD WASHER
	21.10	AS NEC	143-026	BRAKE HOUSING SHIM - 0.03" (NOT SHOWN)
			143-027	BRAKE HOUSING SHIM - 0.06" (NOT SHOWN)
	22	2	GL185BS-156-5	SHIPPING BOLT
	23	AS NEC	GL185-157-05	OUTBOARD STAND SHIM - 0.005"
			GL185-157-10	OUTBOARD STAND SHIM - 0.010"
			GL185-157-31	OUTBOARD STAND SHIM - 0.031"
	24	1	GL185-159	HOFFMAN ELECTRICAL ENCLOSURE, A12064CH MODIFIED
	25	1	GL100-165-1	FELT DUST SEAL
	26	6	1 - 8 UNC x 4"	HEX HEAD CAP SCREW
	27	6	1" WASHER	SAE WASHER
	28	8	13/16 WASHER	Heavy Helical Spring Lock Washers(Inch Series)
	29	4	3/4 - 10 UNC	HEAVY HEX NUT
	30	4	3/4 WASHER	SAE WASHER
	31	1	5/8-11 UNC x 0.625	FLAT POINT SET SCREW
	32	6	3/8-16 UNC x 4	FLAT HEAD CAP SCREWS
	33	6	3/8 - 16 UNC - 1 1/2	Hexagon Socket Head Cap Screw
D	34	3	3/8 - 16 UNC - 1 1/4	Hexagon Socket Head Cap Screw
	35	4	3/8-16 UNC x 0.5	Hex Flange Screw - Regular Thread - Inch
D	36	6	3/8 Washers	High-Collar Helical Spring Lock Washers
	37	4	#8 - 32 UNC - 1/4	Hexagon Socket Head Cap Screw
	38	4	#8 LOCK WASHER	EXT. TOOTH LOCK WASHER
	39	1	ECN 113 52810061	50mm HEIDENHAIN ENCODER
E	40	4	#6 U x 0.3125	DRIVE SCREW
	41	1	P-173	MOTOR TAG - PMAC GEARLESS MACHINE

MACHINE #	WINDING P/N	COIL/WINDING EFFICIENCY (%)	FRAME/MAGNET SIZE (mm)	VOLTAGE (Vac)	MACHINE SPEED (RPM)	CAR SPEED (fpm)
GL260-35L	GL260-170-350	90	260	170	53.5	350
GL260-35H	GL260-360-350	90	260	360	53.5	350
GL260-50L	GL260-170-500	90	260	170	53.5	500
GL260-50H	GL260-360-500	90	260	360	53.5	500
GL260-70L	GL260-170-700	90	260	170	53.5	700

WEIGHT: 4854.4 lbmass

			D	3X GL100-094-1 WAS 1X GL185-094, 3X 3/8 x 1.25	LTL 10/28/19
				SHCS WAS 6X, 6 X 3/8 WASHER WAS 12X, PUR #1111	
E	UPDATE BRAKE PARTS LIST & TAGS, PUR #1260	LTL 1/7/20			

HOLLISTER-WHITNEY
ELEVATOR CO. LLC

TITLE: GEARLESS MACHINE, BASEMENT SET ASSEMBLY

THIS DRAWING IS SUPPLIED AS A REPRESENTATION OF THE EQUIPMENT HOLLISTER-WHITNEY ELEVATOR CO. LLC ("MANUFACTURER") HAS AGREED TO SUPPLY. SLIGHT ADJUSTMENTS MAY OCCUR DURING MANUFACTURING AND INSTALLATION. ANY MODIFICATIONS NOT APPROVED IN WRITING BY MANUFACTURER MAY AFFECT OPERATION, VOIDS ANY WARRANTY AND RELEASES MANUFACTURER OF ALL LIABILITY.
THIS DOCUMENT CONTAINS CONFIDENTIAL AND PROPRIETARY INFORMATION THAT CANNOT BE REPRODUCED OR DIVULGED, IN WHOLE OR IN PART, WITHOUT WRITTEN AUTHORIZATION FROM THE MANUFACTURER.

THIRD ANGLE PROJECTION

DRAWN BY	SCALE	MATERIAL	REFERENCE TOL.
LTL	1 / 5	SEE MATERIAL LIST	ALL DIMENSIONS REFERENCE UNLESS OTHERWISE SPECIFIED
SHEET SIZE: D		DATE: 2/12/2014	GL260-BS SHEET 1 OF 3

PARTS LIST				
ITEM	QTY	PART NUMBER	DESCRIPTION	MASS
1	1	GL260-BS	GEARLES MACHINE, 4000# MAX CAP, 1:1 ROPED	4845.24 lbmass
2	1	GL260BS-156	FOUNDATION PLATE ASSEMBLY - GL260 BASEMENT SET	619.20 lbmass
3	6	3/4 -10 UNC x 10.75"	HEX CAP SCREW	1.49 lbmass
4	6	3/4 WASHER	SAE WASHER	0.04 lbmass

1) INSTALL FOUNDATION PLATE ASSEMBLY (ITEM 2)
2) REMOVE TWO (2) 3/4" SHIPPING BOLT ASSEMBLIES AND DISCARD
3) SET MACHINE IN PLACE OVER 1" MOUNTING STUDS, PLACE WASHERS AND HAND-SNUG 4 HEAVY HEX NUTS ONTO STUDS
4) INSTALL 6X 3/4" GR.5 BOLTS AND WASHERS.
5) TIGHTEN 4X 1" HEAVY HEX NUTS & 6X 3/4" BOLTS TO GRADE 5 STANDARDS (APPROX. 575 ft-lbs FOR 1" & 245 ft-lbs FOR 3/4")

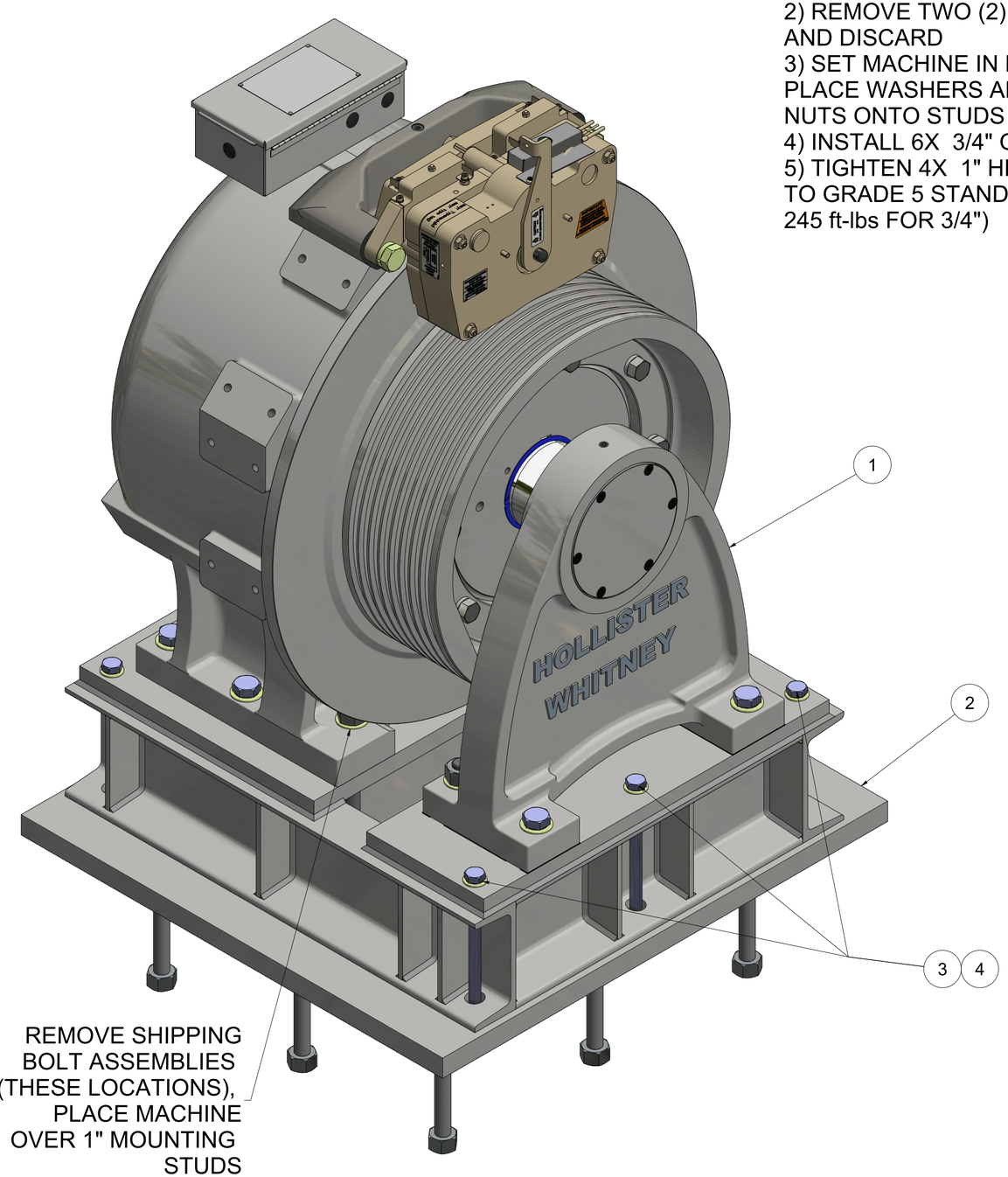

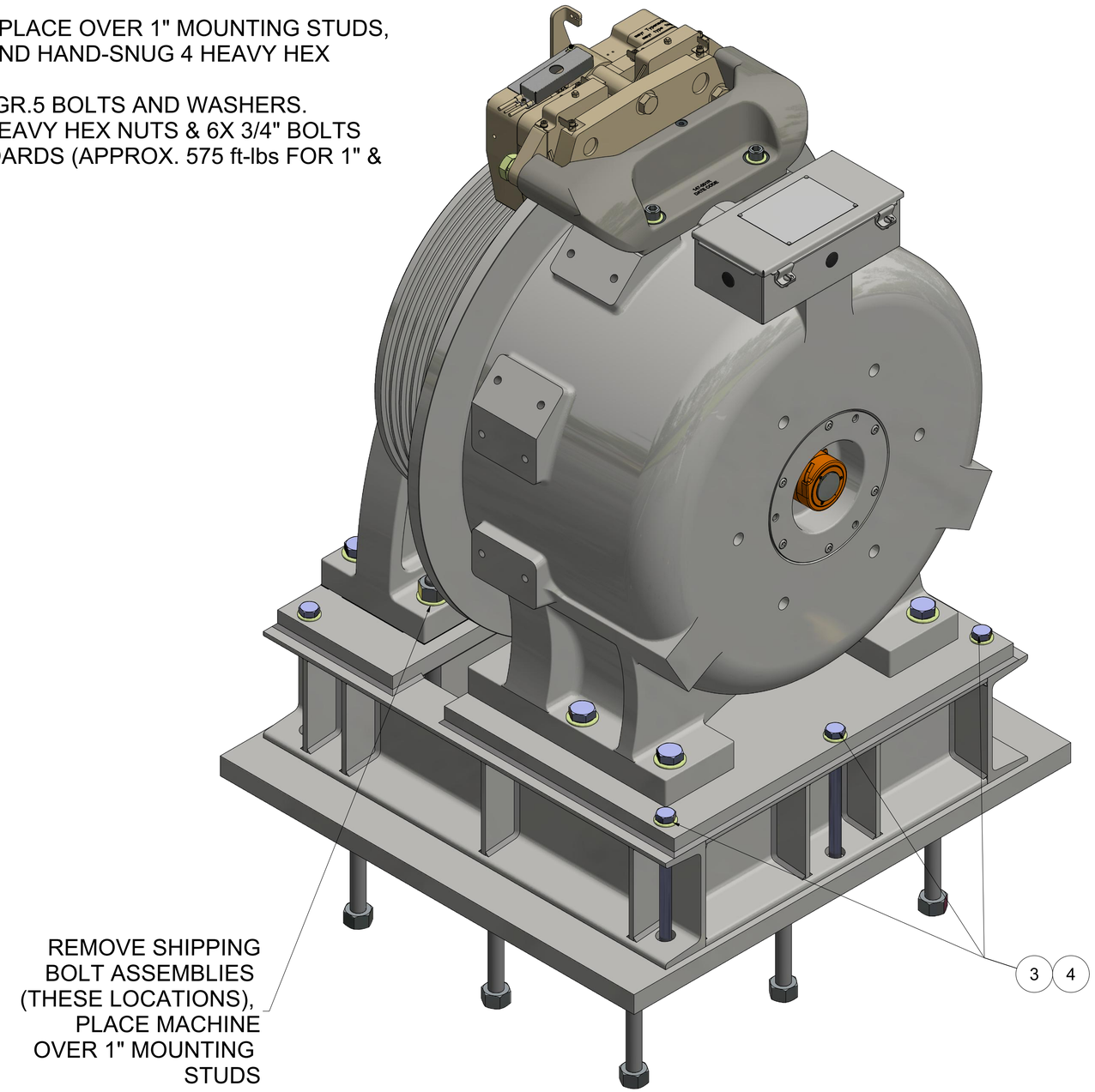

PARTS LIST				
ITEM	QTY	PART NUMBER	DESCRIPTION	MASS
1	1	GL260-BS	GEARLES MACHINE, 4000# MAX CAP, 1:1 ROPED	4845.24 lbmass
2	1	GL260BS-156A	FOUNDATION PLATE ASSEMBLY - GL260 BASEMENT SET	593.36 lbmass
3	6	3/4 -10 UNC x 10.75"	HEX CAP SCREW	1.49 lbmass
4	6	3/4 WASHER	SAE WASHER	0.04 lbmass

1) INSTALL FOUNDATION PLATE ASSEMBLY (ITEM 2)
2) REMOVE TWO (2) 3/4" SHIPPING BOLT ASSEMBLIES AND DISCARD
3) SET MACHINE IN PLACE OVER 1" MOUNTING STUDS, PLACE WASHERS AND HAND-SNUG 4 HEAVY HEX NUTS ONTO STUDS
4) INSTALL 6X 3/4" GR.5 BOLTS AND WASHERS.
5) TIGHTEN 4X 1" HEAVY HEX NUTS & 6X 3/4" BOLTS TO GRADE 5 STANDARDS (APPROX. 575 ft-lbs FOR 1" & 245 ft-lbs FOR 3/4")

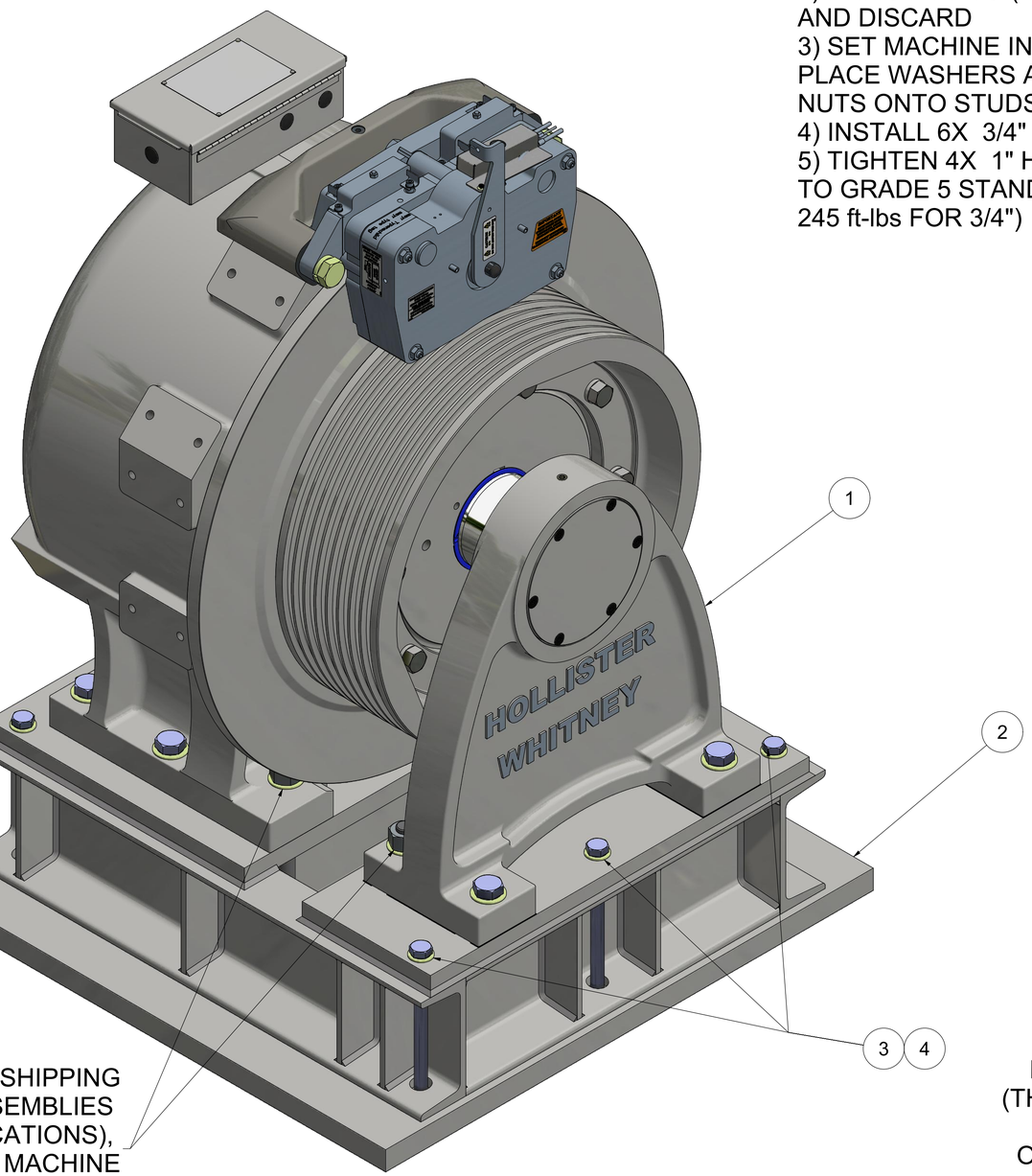

REMOVE SHIPPING BOLT ASSEMBLIES (THESE LOCATIONS), PLACE MACHINE OVER 1" MOUNTING STUDS

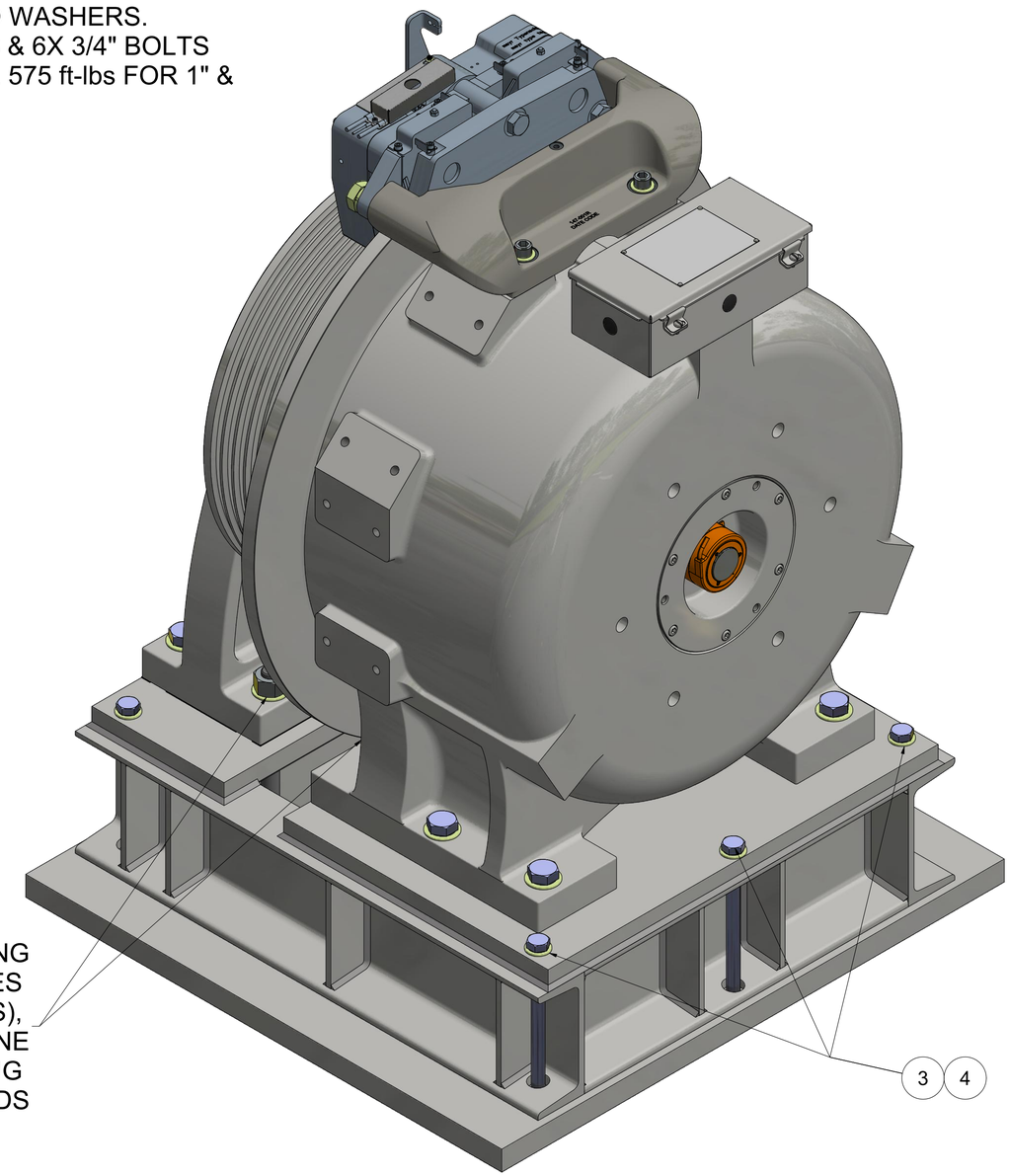

REMOVE SHIPPING BOLT ASSEMBLIES (THESE LOCATIONS), PLACE MACHINE OVER 1" MOUNTING STUDS

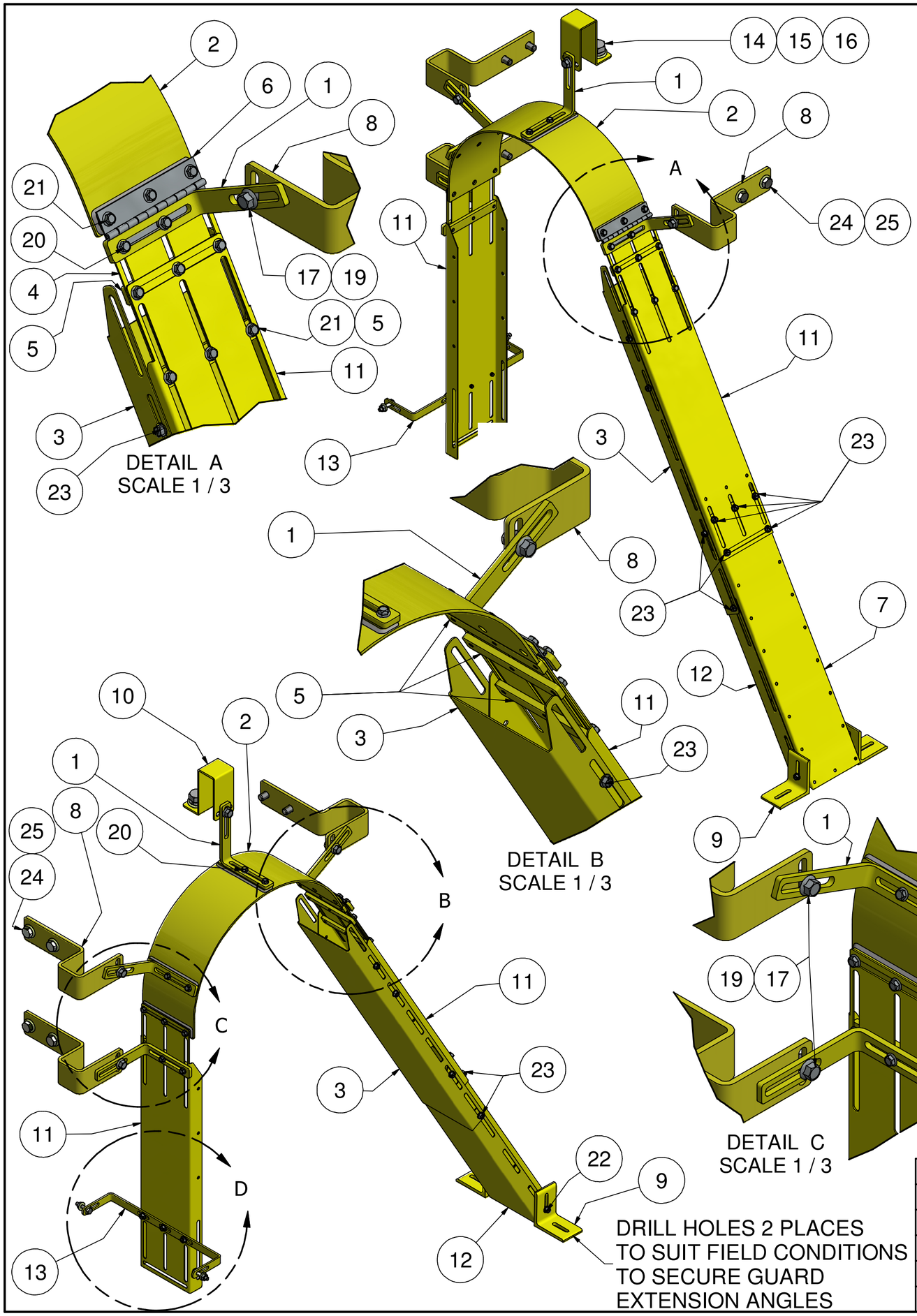

PARTS LIST

ITEM	QTY	PART NUMBER	DESCRIPTION
1	4	GL101-160	GUARD BRACKET
2	1	GL101-161	GUARD ASSEMBLY - 15" TW
3	1	GL101-163	BOTTOM EXTENSION COVER - LONG
4	1	GL171-164	GUARD BRACKET
5	4	GL171-165	GUARD BRACKET
6	1	GL171-166	HINGE - GUARD
7	1	GL101-168	GUARD EXTENSION - LONG
8	3	GL171-169	HOUSING TO GUARD BRACKET - HEAVY
9	2	GL171-170	FLOOR TO GUARD BRACKET
10	1	GL171-171	HOUSING TO GUARD BRACKET - CENTER
11	2	GL101-172	TOP EXTENSION - LONG
12	1	GL101-173	BOTTOM EXTENSION COVER - SHORT
13	1	GL101-175	GUARD TO BASE BRACKET
14	1	3/4 - 10 UNC x 1.0	HEX HEAD CAP SCREW
15	1	3/4" WASHER	STANDARD LOCK WASHER
16	1	3/4 WASHER	SAE WASHER
17	3	3/8 - 16 UNC x 0.75"	WHIZ BOLT
18	1	3/8 - 16 UNC x 0.625"	WHIZ BOLT
19	4	3/8 UNC	WHIZ NUT
20	8	1/4 - 20 UNC x 0.625"	WHIZ BOLT
21	14	1/4 - 20 UNC x 0.375"	WHIZ BOLT
22	2	1/4 - 20 UNC x 0.5"	HEX WASHER THREAD FORMING - TYPE F
23	17	1/4 - 20 UNC x 0.375"	HEX WASHER THREAD FORMING - TYPE F
24	6	1/2 - 13 UNC x 1.0	HEX HEAD CAP SCREW
25	6	1/2" WASHER	STANDARD WASHER
26	2	1/4 - 20 UNC x 1.25"	HEX HEAD CAP SCREW
27	2	1/4 - 20 UNC	HEX NUT
28	4	1/4" WASHER	STANDARD WASHER

LOCATE & DRILL 2x 5/32"
HOLES IN MACHINE
BASE & SECURE 1/4" BOLTS
TO SUIT FIELD CONDITIONS

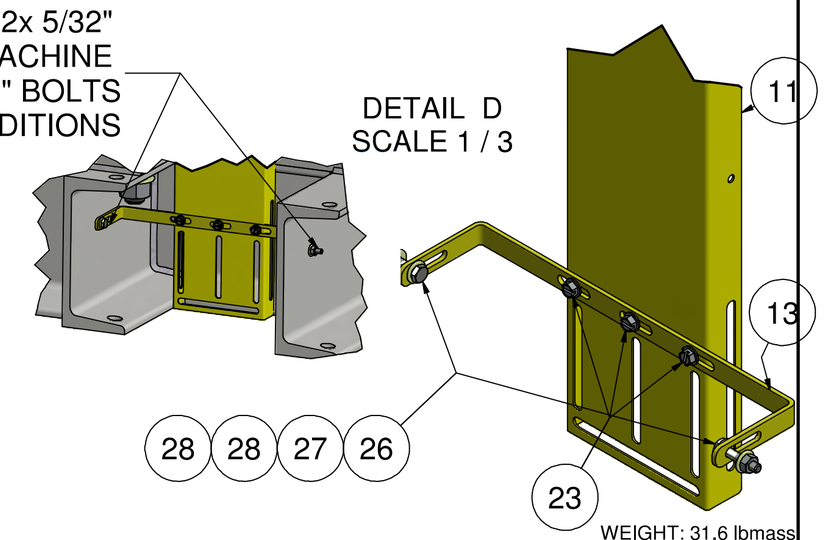

WEIGHT: 31.6 lbmass

			A	PRODUCTION RELEASE, PUR # 921	LTL 12/13/17

HOLLISTER-WHITNEY
ELEVATOR CO. LLC

TITLE: GUARD ASSEMBLY - SMALL FRAME GEARLESS MACHINE, 15" T.W.

DRAWN BY	SCALE	MATERIAL	REFERENCE TOL.
LTL	1/6	SEE PARTS LIST	ALL DIMENSIONS REFERENCE UNLESS OTHERWISE SPECIFIED

SHEET SIZE	DATE	
C	12/12/2017	GL101-176 SHEET 1 OF 1

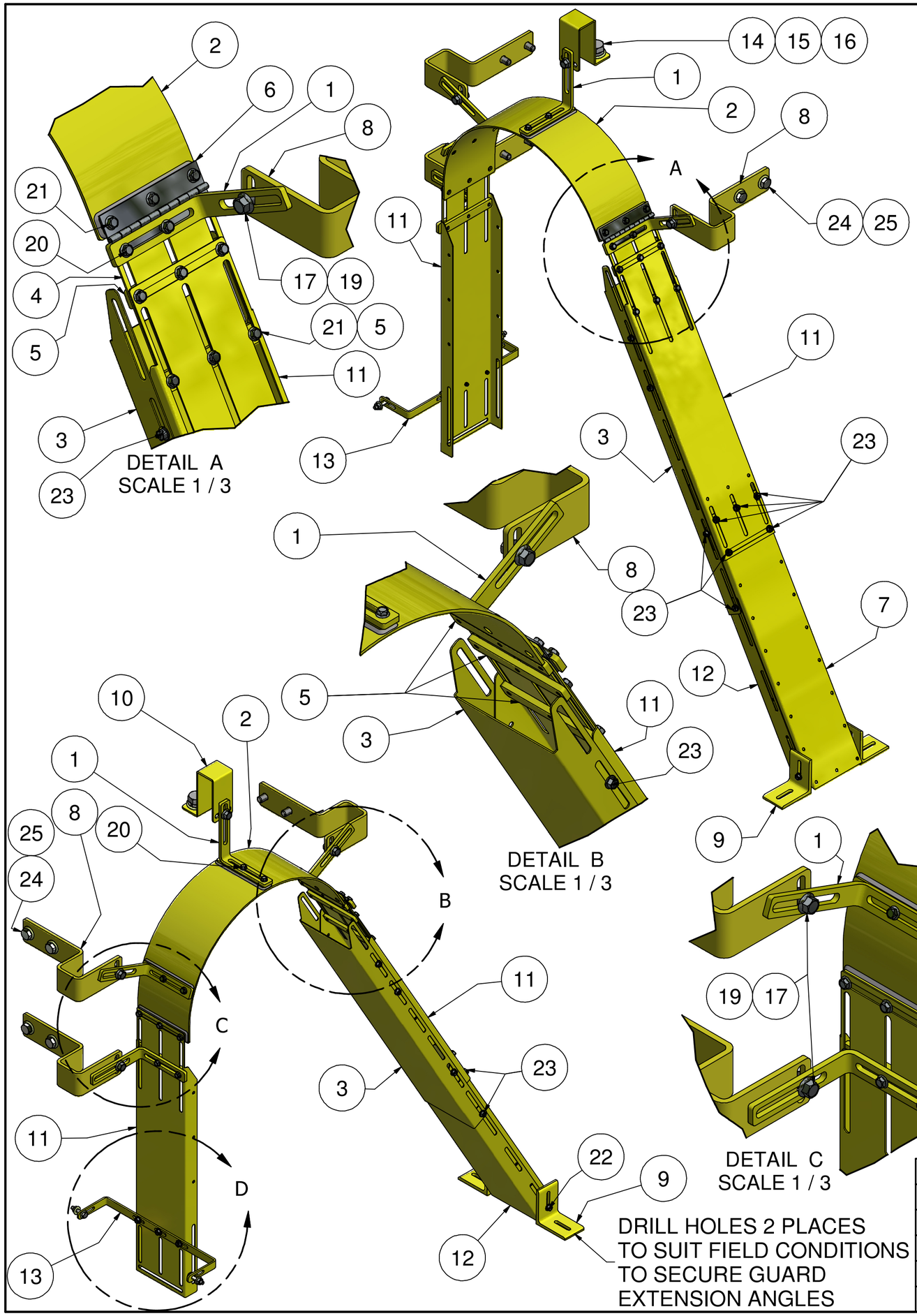

PARTS LIST

ITEM	QTY	PART NUMBER	DESCRIPTION
1	4	GL101-160	GUARD BRACKET
2	1	GL101-161-1	GUARD ASSEMBLY - 15.75" TW
3	1	GL101-163	BOTTOM EXTENSION COVER - LONG
4	1	GL171-164	GUARD BRACKET
5	4	GL171-165	GUARD BRACKET
6	1	GL171-166	HINGE - GUARD
7	1	GL101-168	GUARD EXTENSION - LONG
8	3	GL171-169	HOUSING TO GUARD BRACKET - HEAVY
9	2	GL171-170	FLOOR TO GUARD BRACKET
10	1	GL171-171	HOUSING TO GUARD BRACKET - CENTER
11	2	GL101-172	TOP EXTENSION - LONG
12	1	GL101-173	BOTTOM EXTENSION COVER - SHORT
13	1	GL101-175	GUARD TO BASE BRACKET
14	1	3/4 - 10 UNC x 1.0	HEX HEAD CAP SCREW
15	1	3/4" WASHER	STANDARD LOCK WASHER
16	1	3/4 WASHER	SAE WASHER
17	3	3/8 - 16 UNC x 0.75"	WHIZ BOLT
18	1	3/8 - 16 UNC x 0.625"	WHIZ BOLT
19	4	3/8 UNC	WHIZ NUT
20	8	1/4 - 20 UNC x 0.625"	WHIZ BOLT
21	14	1/4 - 20 UNC x 0.375"	WHIZ BOLT
22	2	1/4 - 20 UNC x 0.5"	HEX WASHER THREAD FORMING - TYPE F
23	17	1/4 - 20 UNC x 0.375"	HEX WASHER THREAD FORMING - TYPE F
24	6	1/2 - 13 UNC x 1.0	HEX HEAD CAP SCREW
25	6	1/2" WASHER	STANDARD WASHER
26	2	1/4 - 20 UNC x 1.25"	HEX HEAD CAP SCREW
27	2	1/4 - 20 UNC	HEX NUT
28	4	1/4" WASHER	STANDARD WASHER

WEIGHT: 31.7 lbmass

			A	PRODUCTION RELEASE, PUR # 918	LTL 4/16/18

HOLLISTER-WHITNEY
ELEVATOR CO. LLC

TITLE: GUARD - SMALL FRAME GEARLESS MACHINE, 15.75" T.W.

DRAWN BY	SCALE	MATERIAL	REFERENCE TOL.
LTL	1/6	SEE PARTS LIST	ALL DIMENSIONS REFERENCE UNLESS OTHERWISE SPECIFIED

SHEET SIZE	DATE	
C	4/16/2018	GL101-177 SHEET 1 OF 1

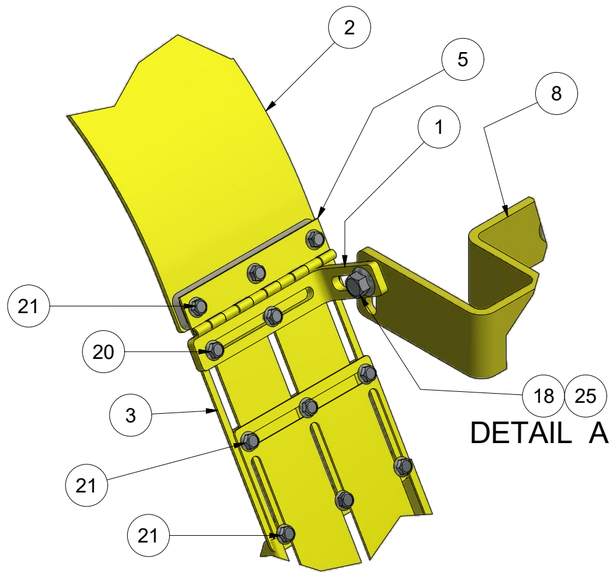

DETAIL A

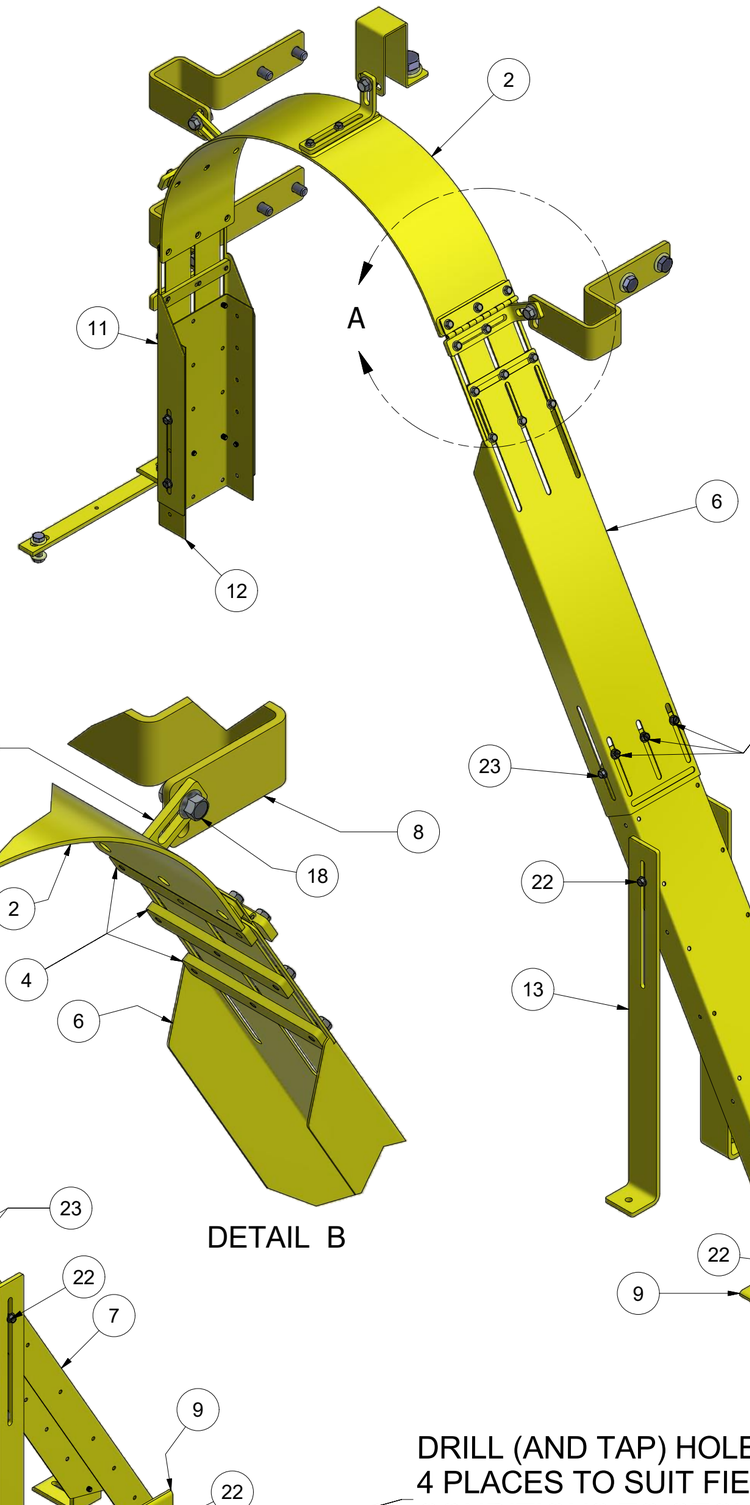

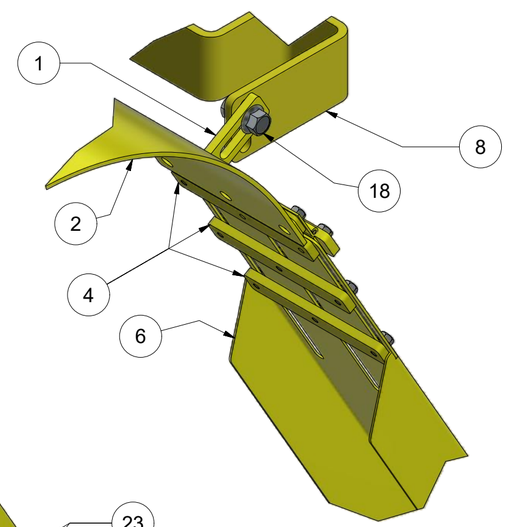

DETAIL B

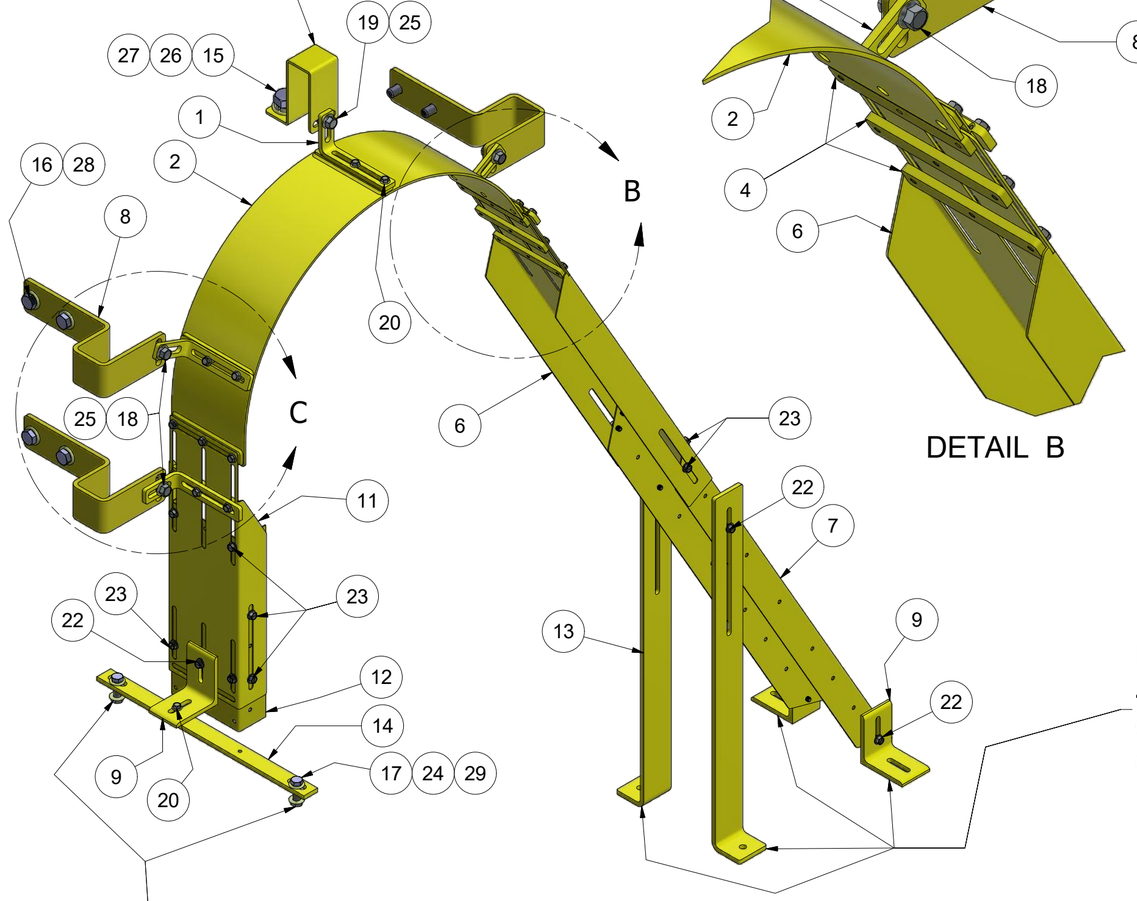

DRILL (AND TAP) HOLES
4 PLACES TO SUIT FIELD
CONDITIONS TO SECURE
GUARD EXTENSION ANGLES

BOLT THROUGH EXISTING
HOLES ON MACHINE BEDPLATE

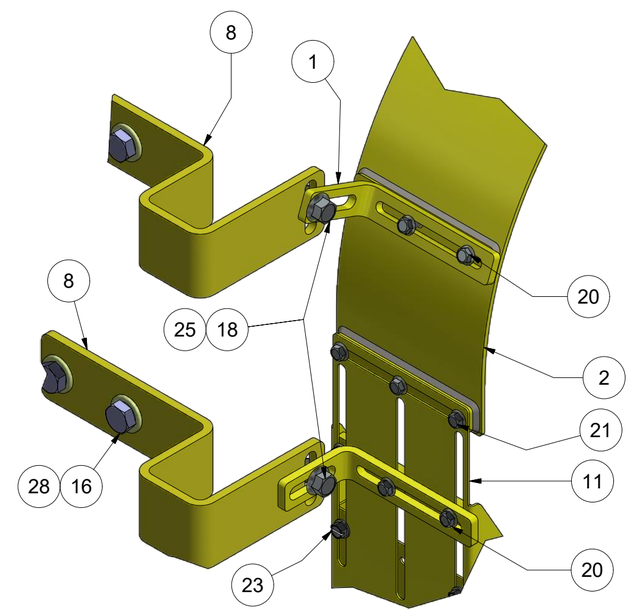

DETAIL C

PARTS LIST

ITEM	QTY	PART NUMBER	DESCRIPTION
1	4	GL171-160	GUARD BRACKET
2	1	GL171-161	GUARD ASSEMBLY - AC GEARLESS 20" TW
3	1	GL171-164	GUARD BRACKET
4	4	GL171-165	GUARD BRACKET
5	1	GL171-166	HINGE - GUARD
6	1	GL171-167	TOP EXTENSION
7	1	GL171-168	GUARD EXTENSION - LONG
8	3	GL171-169	HOUSING TO GUARD BRACKET - HEAVY
9	3	GL171-170	FLOOR TO GUARD BRACKET
10	1	GL171-171	HOUSING TO GUARD BRACKET - CENTER
11	1	GL171-172	TOP EXTENSION - SHORT
12	1	GL171-173	GUARD EXTENSION - SHORT
13	2	GL185-174	BASE BRACKET - T.S. GUARD
14	1	GL171-175	GUARD TO BASE BRACKET
15	1	3/4" - 10 UNC x 1"	HEX CAP SCREW
16	6	1/2" - 13 UNC x 1"	HEX CAP SCREW
17	2	3/8" - 16 UNC x 1 1/4"	HEX CAP SCREW
18	3	3/8 - 16 UNC x 0.75"	WHIZ BOLT
19	1	3/8 - 16 UNC x 0.625"	WHIZ BOLT
20	9	1/4 - 20 UNC x 0.625"	WHIZ BOLT
21	14	1/4 - 20 UNC x 0.375"	WHIZ BOLT
22	5	1/4 - 20 UNC x 0.5"	HEX WASHER THREAD FORMING - TYPE F
23	12	1/4 - 20 UNC x 0.375"	HEX WASHER THREAD FORMING - TYPE F
24	2	3/8 - 16 UNC	HEX JAM NUT
25	4	3/8 UNC	WHIZ NUT
26	1	3/4 WASHER	SAE WASHER
27	1	3/4" WASHER	STANDARD LOCK WASHER
28	6	1/2" WASHER	SAE WASHER
29	4	3/8" WASHER	STANDARD WASHER
30	2	GL171-169OB	OPTIONAL OUTBOARD STAND BRACKET (SEE PAGE 2)

B ***SEE PAGE 2 OF 2 FOR DETAILS OF GL171-169OB USE***

WEIGHT: 38.780 lbmass

			C	CORRECTED ITEM 17 PART #, PUR #1144	DRO 07/12/19
			B	ADD OPTIONAL PART, PUR #1100	LTL 04/29/19
			A	PRODUCTION RELEASE, PUR #539	LTL 10/31/12

THIS DRAWING IS SUPPLIED AS A REPRESENTATION OF THE EQUIPMENT HOLLISTER-WHITNEY ELEVATOR CO. LLC ("MANUFACTURER") HAS AGREED TO SUPPLY. SLIGHT ADJUSTMENTS MAY OCCUR DURING MANUFACTURING AND INSTALLATION. ANY MODIFICATIONS NOT APPROVED IN WRITING BY MANUFACTURER MAY AFFECT OPERATION, VOIDS ANY WARRANTY AND RELEASES MANUFACTURER OF ALL LIABILITY.
THIS DOCUMENT CONTAINS CONFIDENTIAL AND PROPRIETARY INFORMATION THAT CANNOT BE REPRODUCED OR DIVULGED, IN WHOLE OR IN PART, WITHOUT WRITTEN AUTHORIZATION FROM THE MANUFACTURER.

THIRD ANGLE PROJECTION

HOLLISTER-WHITNEY
ELEVATOR CO. LLC

TITLE: GUARD - GL171 GEARLESS MACHINE, 20" T.W.

DRAWN BY	SCALE	MATERIAL	REFERENCE TOL.
LTL	1 / 6	SEE PARTS LIST	ALL DIMENSIONS REFERENCE UNLESS OTHERWISE SPECIFIED

SHEET SIZE	DATE	
C	10/30/2012	GL171-176 SHEET 1 OF 2

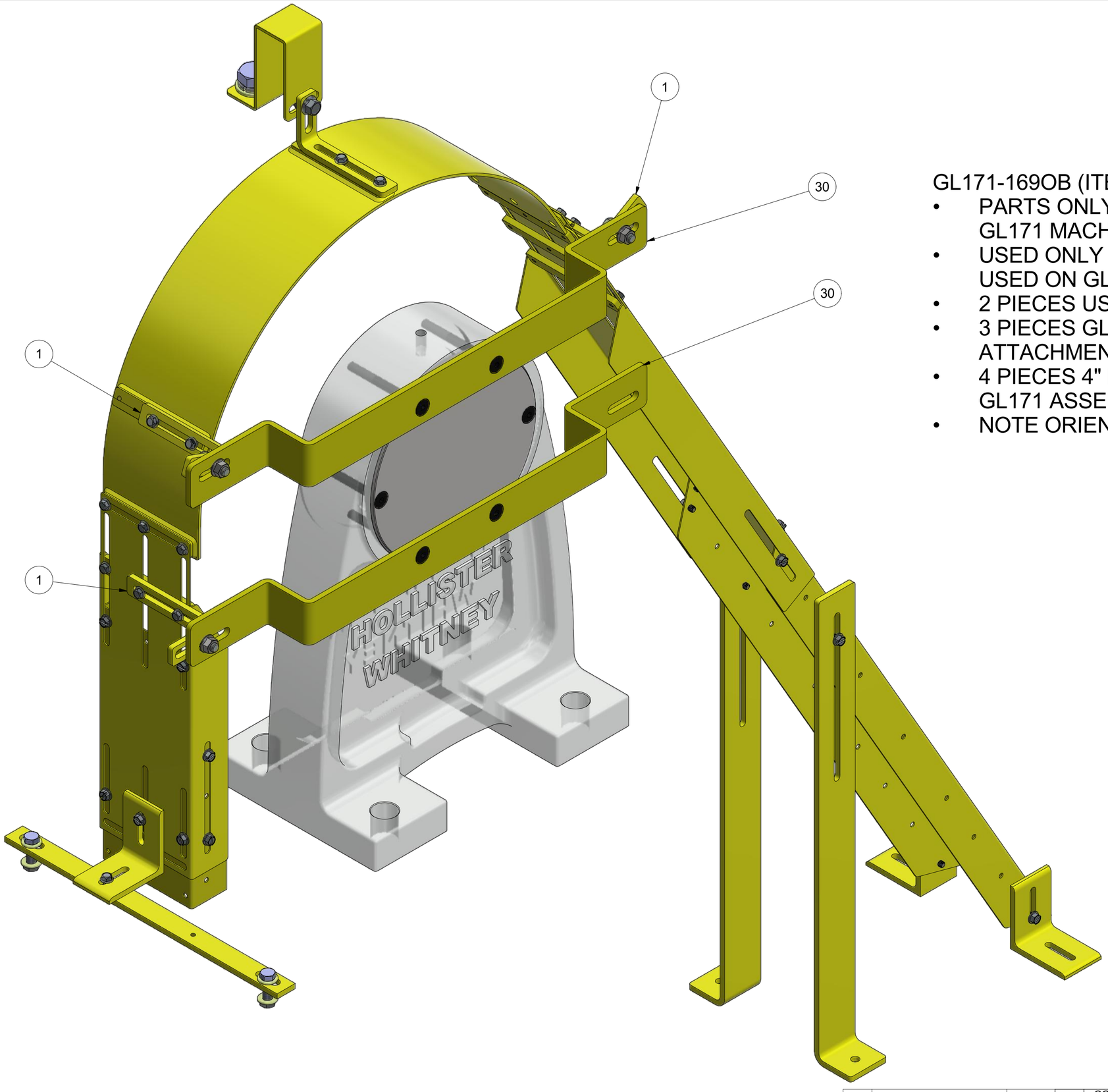

GL171-169OB (ITEM 30) USAGE DETAILS

- PARTS ONLY USED WHEN GUARDING IS USED ON GL171 MACHINE ASSEMBLIES
- USED ONLY WHEN FOUR (4) MAYR#6 BRAKES ARE USED ON GL171 MACHINE ASSEMBLIES.
- 2 PIECES USED FOR EACH ASSEMBLY.
- 3 PIECES GL171-160 (ITEM 1) FLIPPED AROUND FOR ATTACHMENT
- 4 PIECES 4" FLAT HEAD CAP SCREWS (PART OF GL171 ASSEMBLY) USED FOR ATTACHEMENT
- NOTE ORIENTATION OF PARTS

WEIGHT: 158.549 lbmass

			C	CORRECTED ITEM 17 PART #, PUR #1144	DRO 07/12/19
			B	ADD OPTIONAL PART, PUR #1100	LTL 04/29/19
			A	PRODUCTION RELEASE, PUR #539	LTL 10/31/12

THIS DRAWING IS SUPPLIED AS A REPRESENTATION OF THE EQUIPMENT HOLLISTER-WHITNEY ELEVATOR CO. LLC ("MANUFACTURER") HAS AGREED TO SUPPLY. SLIGHT ADJUSTMENTS MAY OCCUR DURING MANUFACTURING AND INSTALLATION. ANY MODIFICATIONS NOT APPROVED IN WRITING BY MANUFACTURER MAY AFFECT OPERATION, VOIDS ANY WARRANTY AND RELEASES MANUFACTURER OF ALL LIABILITY.
THIS DOCUMENT CONTAINS CONFIDENTIAL AND PROPRIETARY INFORMATION THAT CANNOT BE REPRODUCED OR DIVULGED, IN WHOLE OR IN PART, WITHOUT WRITTEN AUTHORIZATION FROM THE MANUFACTURER.

THIRD ANGLE PROJECTION

HOLLISTER-WHITNEY
ELEVATOR CO. LLC

TITLE: GUARD - GL171 GEARLESS MACHINE, 20" T.W.

DRAWN BY	SCALE	MATERIAL	REFERENCE TOL.
LTL	1 / 3	SEE PARTS LIST	ALL DIMENSIONS REFERENCE UNLESS OTHERWISE SPECIFIED

SHEET SIZE	DATE	
C	10/30/2012	GL171-176 SHEET 2 OF 2

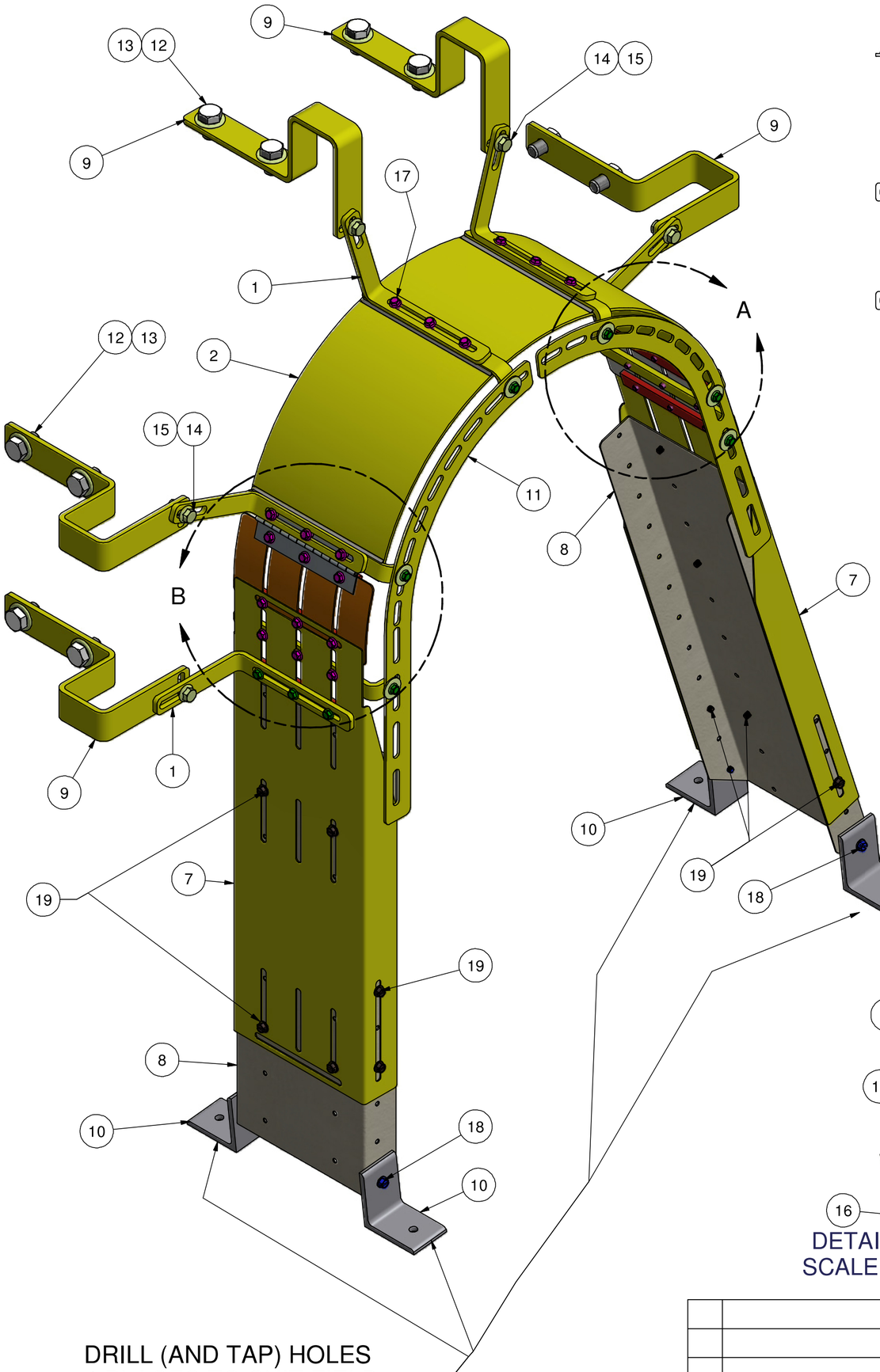

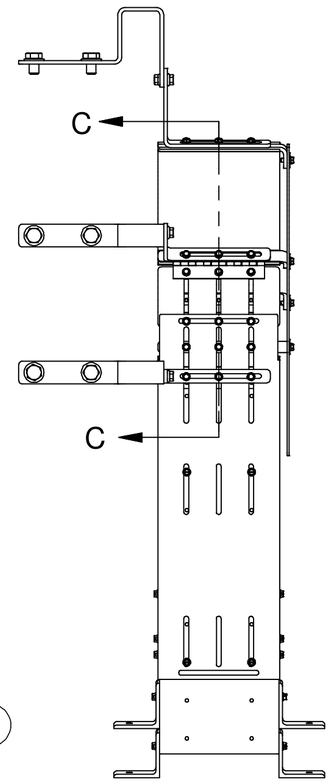

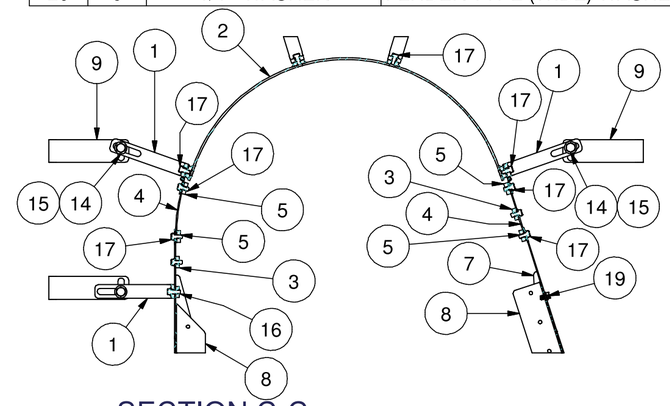

SECTION C-C

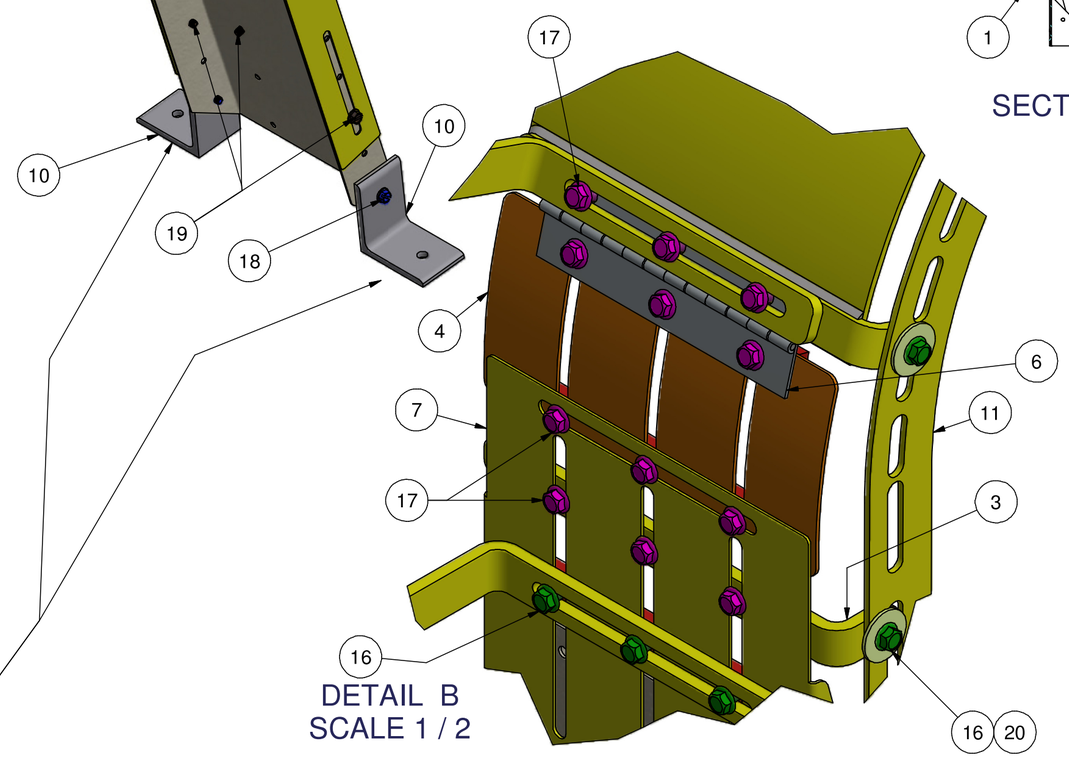

DETAIL B
SCALE 1 / 2

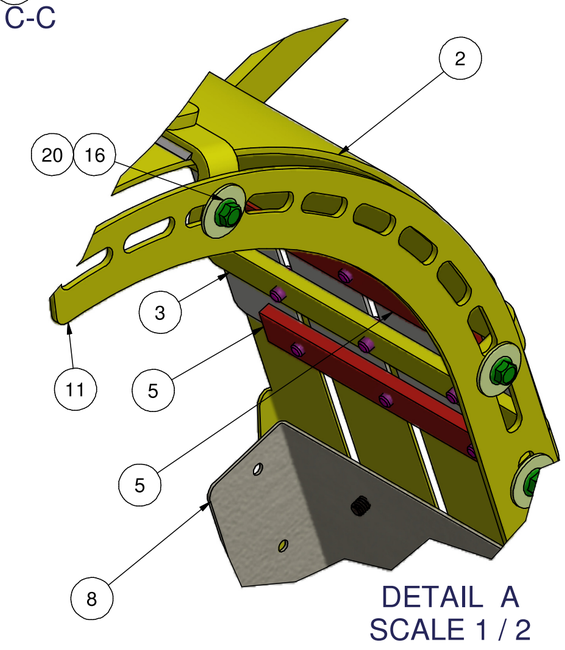

DETAIL A
SCALE 1 / 2

Weight: 51.35 lbmass

Parts List

ITEM	QTY	PART NUMBER	DESCRIPTION
1	5	GL130A1-160	GUARD BRACKET
2	1	GL130A1-161	GUARD ASSEMBLY - AC GEARLESS 20" TW
3	2	GL185-163	GUARD BRACKET
4	2	GL185-164	GUARD BRACKET
5	5	GL185-165	GUARD BRACKET
6	2	43-OH-166	HINGE - GUARD
7	2	GL130A1-167	TOP EXTENSION
8	2	GL130A1-168	GUARD EXTENSION
9	5	GL130A1-169	GUARD BRACKET
10	4	43-OH-170	BOTTOM EXTENSION ANGLE
11	2	GL130A1-171	STIFFENER - GUARD
12	10	5/8 - 11 UNC x 1"	HEX HEAD CAP SCREW
13	10	5/8 WASHER	STANDARD WASHER
14	5	3/8-16 UNC x 0.875	Hex Flange Screw - Regular Thread - Inch
15	5	0.375 - 16	Hex Flange Nut
16	9	1/4 - 20 UNC x 0.625"	WHIZ BOLT
17	30	1/4-20 UNC x 0.5	WHIZ BOLT
18	4	1/4 - 20 UNC x 0.5"	HEX WASHER THREAD FORMING - TYPE F
19	16	1/4 - 20 UNC x 0.375"	HEX WASHER THREAD FORMING - TYPE F
20	6	1/4 - WASHER	FENDER TYPE (WIDE) WASHER

DRILL (AND TAP) HOLES
4 PLACES TO SUIT FIELD
CONDITIONS TO SECURE
GUARD EXTENSION ANGLES

A	PRODUCTION RELEASE, PUR #599	LTL 5/23/13						

HOLLISTER-WHITNEY
ELEVATOR CO.

TITLE: GUARD - GEARLESS MACHINE, 20" TW

DRAWN BY	SCALE	MATERIAL	DIMENSIONAL TOL.
LTL	NA	SEE PARTS LIST	1 PLACE ±0.01, 2 PLACE ±0.005 3 & 4 PLACE ±0.001, ANGLES ±0.1° REF., OPEN, (NOMINAL) ± 0.0156

SHEET SIZE: C | DATE: 5/21/2013 | **GL130A1-176**

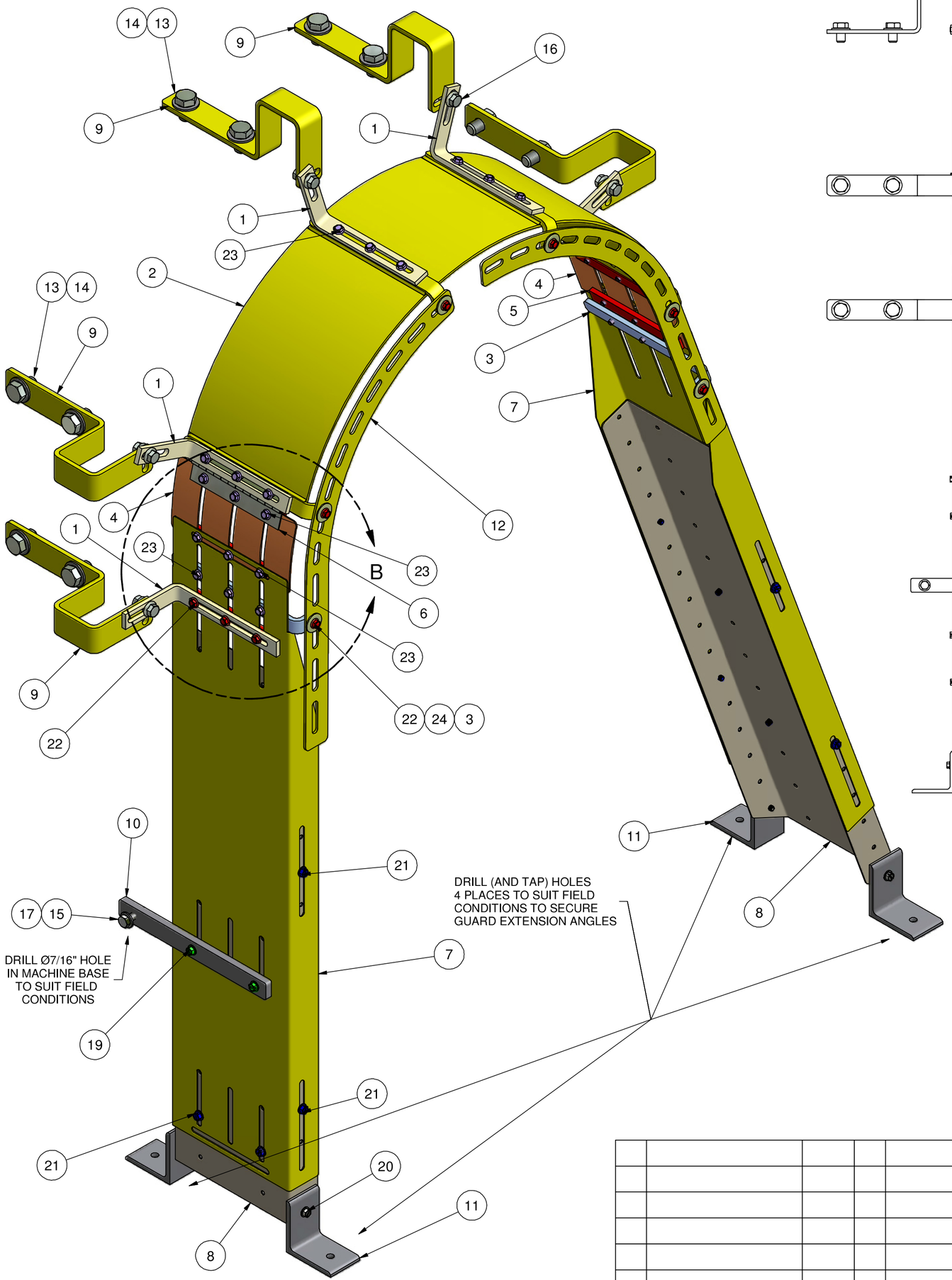

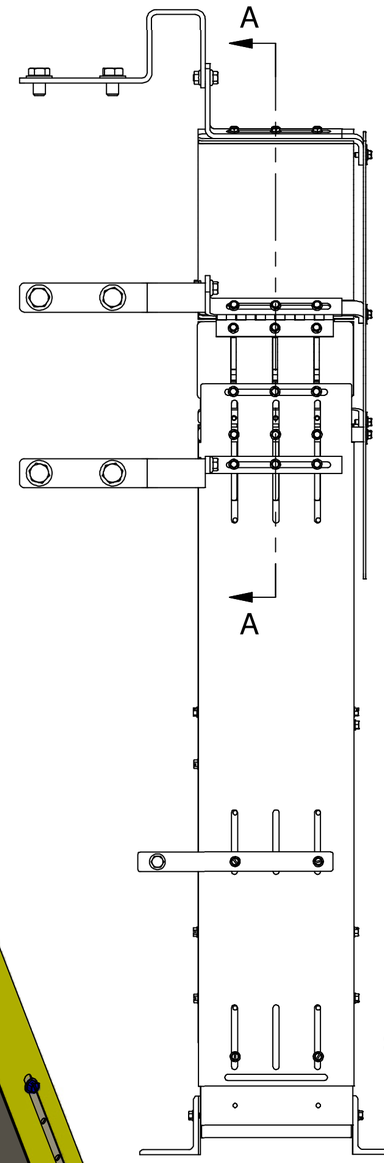

Parts List			
ITEM	QTY	PART NUMBER	DESCRIPTION
1	5	GL185-160	GUARD BRACKET
2	1	GL185-161	GUARD ASSEMBLY - AC GEARLESS 25" TW
3	2	GL185-163	GUARD BRACKET
4	2	GL185-164	GUARD BRACKET
5	5	GL185-165	GUARD BRACKET
6	2	43-OH-166	HINGE - GUARD
7	2	GL185-167	TOP EXTENSION
8	2	GL185-168	GUARD EXTENSION
9	5	GL185-169	GUARD BRACKET
10	1	GL185-170	BRACKET - BASE TO GUARD
11	4	43-OH-170	BOTTOM EXTENSION ANGLE
12	2	GL185-171	STIFFENER - GUARD
13	10	5/8 - 11 UNC x 1"	HEX HEAD CAP SCREW
14	10	5/8 WASHER	STANDARD WASHER
15	1	3/8 - 16 UNC x 1.25"	HHCS
16	5	3/8-16 UNC x 0.875	WHIZ BOLT/FLANGE SCREW
17	1	3/8 WASHER	STANDARD WASHER
18	5	3/8 - 16 UNC	WHIZ NUT
19	2	1/4 - 20 UNC - 0.625	HEX WASHER THREAD FORMING - TYPE F
20	4	1/4 - 20 UNC -0.5	HEX WASHER THREAD FORMING - TYPE F
21	14	1/4 - 20 UNC x 0.375"	HEX WASHER THREAD FORMING - TYPE F
22	9	1/4 -20 UNC x 0.625"	WHIZ BOLT
23	30	1/4-20 UNC x 0.5	WHIZ BOLT
24	6	1/4 WASHER	WIDE WASHER

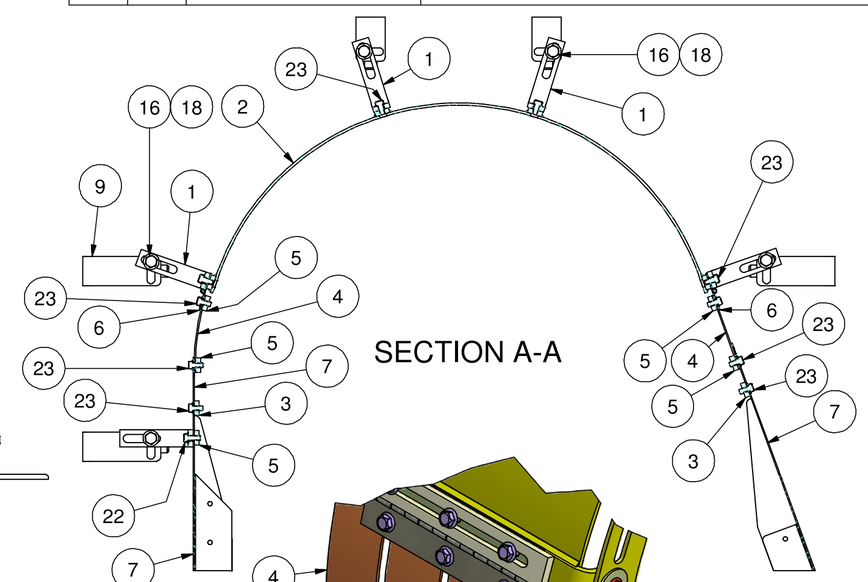

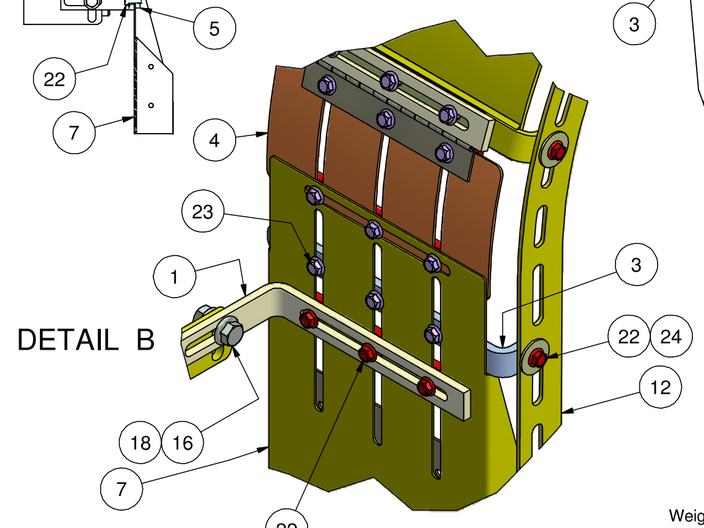

Weight: 61.10 lbmass

						A	PRODUCTION RELEASE, PUR #519	LTL 8/22/12

HOLLISTER-WHITNEY
ELEVATOR CO.

TITLE
GUARD - GEARLESS MACHINE, 25" TW

DRAWN BY	SCALE	MATERIAL	DIMENSIONAL TOL.
LTL	NA	SEE PARTS LIST	1 PLACE ±0.01, 2 PLACE ±0.005 3 & 4 PLACE ±0.001, ANGLES ±0.1° REF., OPEN, (NOMINAL) ± 0.0156

SHEET SIZE C | DATE 8/22/2012 | **GL185-176**

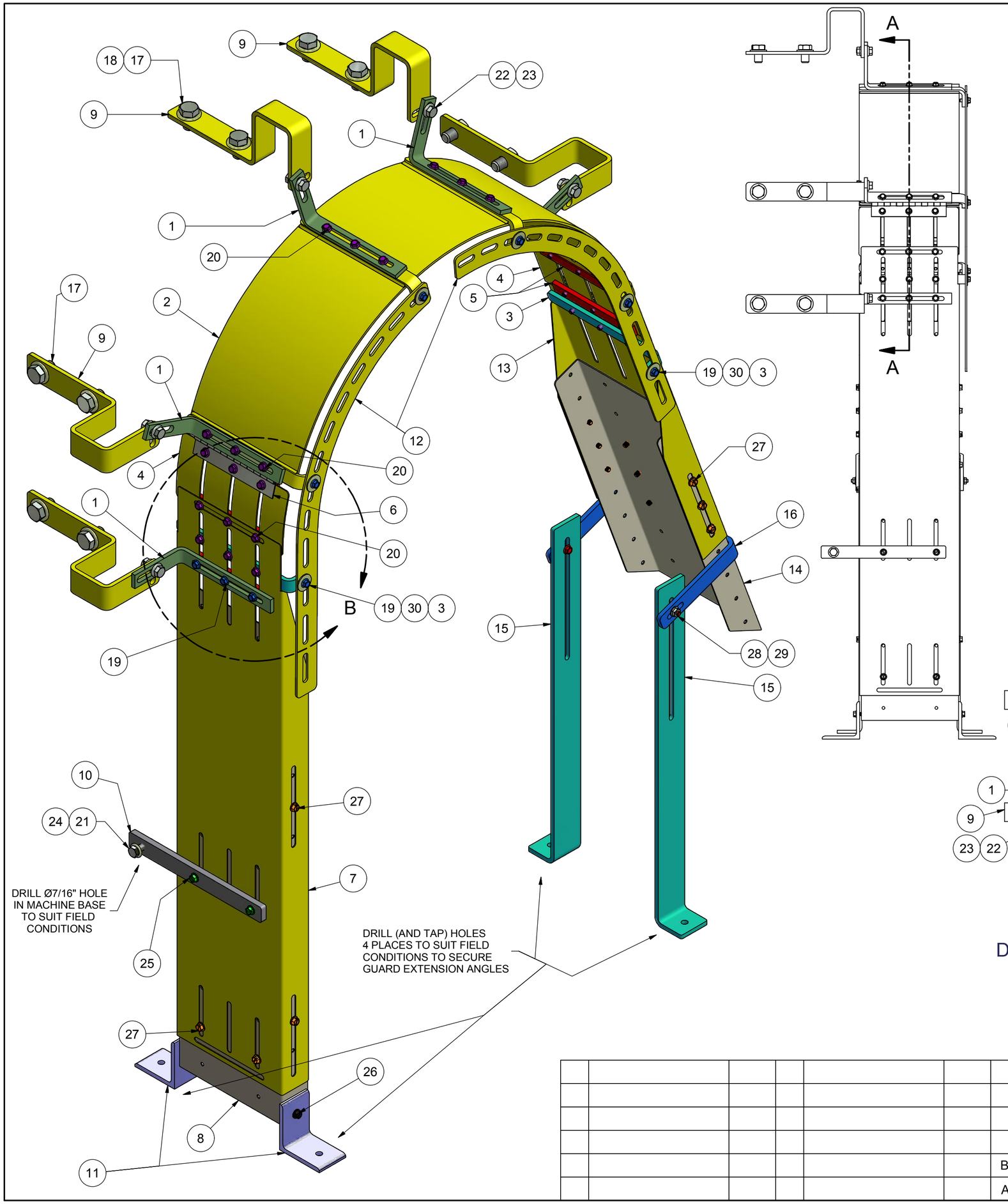

Parts List

ITEM	QTY	PART NUMBER	DESCRIPTION
1	5	GL185-160	GUARD BRACKET
2	1	GL185-161	GUARD ASSEMBLY - AC GEARLESS 25" TW
3	2	GL185-163	GUARD BRACKET
4	2	GL185-164	GUARD BRACKET
5	5	GL185-165	GUARD BRACKET
6	2	43-OH-166	HINGE - GUARD
7	1	GL185-167	TOP EXTENSION
8	1	GL185-168	GUARD EXTENSION
9	5	GL185-169	GUARD BRACKET
10	1	GL185-170	BRACKET - BASE TO GUARD
11	2	43-OH-170	BOTTOM EXTENSION ANGLE
12	2	GL185-171	STIFFENER - GUARD
13	1	GL185-172	TOP EXTENSION - SHORT
14	1	GL185-173	GUARD EXTENSION - SHORT
15	2	GL185-174	BASE BRACKET - T.S. GUARD
16	1	GL185-175	BRACKET - T. S. GUARD RETAINER
17	10	5/8 - 11 UNC x 1"	HEX HEAD CAP SCREW
18	10	5/8 WASHER	STANDARD WASHER
19	9	1/4 - 20 UNC x 0.625"	WHIZ BOLT
20	30	1/4-20 UNC x 0.5	WHIZ BOLT
21	1	3/8 - 16 UNC x 1.25"	HEX HEAD CAP SCREW
22	5	3/8 - 16 UNC x 0.875	WHIZ BOLT/FLANGE SCREW
23	5	3/8 - 16 UNC	WHIZ NUT
24	1	3/8" WASHER	STANDARD WASHER
25	2	1/4 - 20 UNC - 0.625	HEX WASHER THREAD FORMING - TYPE F
26	4	1/4 - 20 UNC x 0.5"	HEX WASHER THREAD FORMING - TYPE F
27	16	1/4 - 20 UNC x 0.375"	HEX WASHER THREAD FORMING - TYPE F
28	2	1/4 - 20 UNC x 0.875"	WHIZ BOLT
29	2	1/4 - 20 UNC	WHIZ NUT
30	6	1/4 WASHER	WIDE WASHER

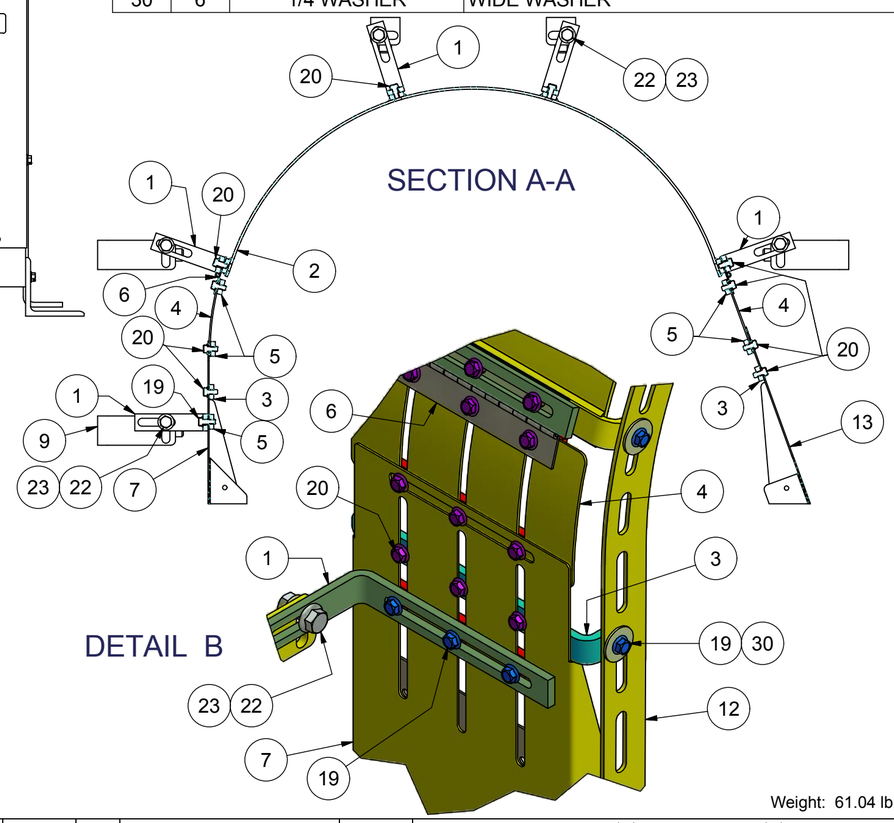

Weight: 61.04 lbmass

B	UPDATE TITLE, PUR #555	LTL 1/11/13
A	PRODUCTION RELEASE, PUR #519	LTL 8/23/12

HOLLISTER-WHITNEY
ELEVATOR CO.

TITLE: GUARD - GEARLESS MACHINE (WITH GRIPPER), 25" TW

DRAWN BY: LTL | SCALE: NA | MATERIAL: SEE PARTS LIST | DIMENSIONAL TOL. 1 PLACE ±0.01, 2 PLACE ±0.005, 3 & 4 PLACE ±0.001, ANGLES ±0.1°, REF., OPEN, (NOMINAL) ± 0.0156

SHEET SIZE: C | DATE: 8/8/2011 | **GL185-177**

Parts List			
ITEM	QTY	PART NUMBER	DESCRIPTION
1	1	GL100-159-12	MOUNTING PLATE
2	1	GL100-159-13	1-1/4 STRAIGHT BOX CONNECTOR (FLEXCON) - REF P/N BRID412DC2
3	1	GL100-159-13-1	1-1/4 90° BOX CONNECTOR (FLEXCON)
4	1	GL100-159-14	1-1/4 FLEX CONDUIT - 3FT LENGTH - REF. P/N GRF A114
5	2	GL100-159-15	1-1/4 ANTI SHORT BUSHING - REF. P/N THOMAS & BETTS CO. #425
6	1	GL100-159-18	BOX CONNECTOR PLATE
7	2	1/2 - 13UNC x 1"	SOCKET HEAD CAP SCREW
8	4	3/8 - 16 UNC x 0.625"	WHIZ BOLT
9	4	1/4 - 20 UNC x 0.375"	WHIZ BOLT

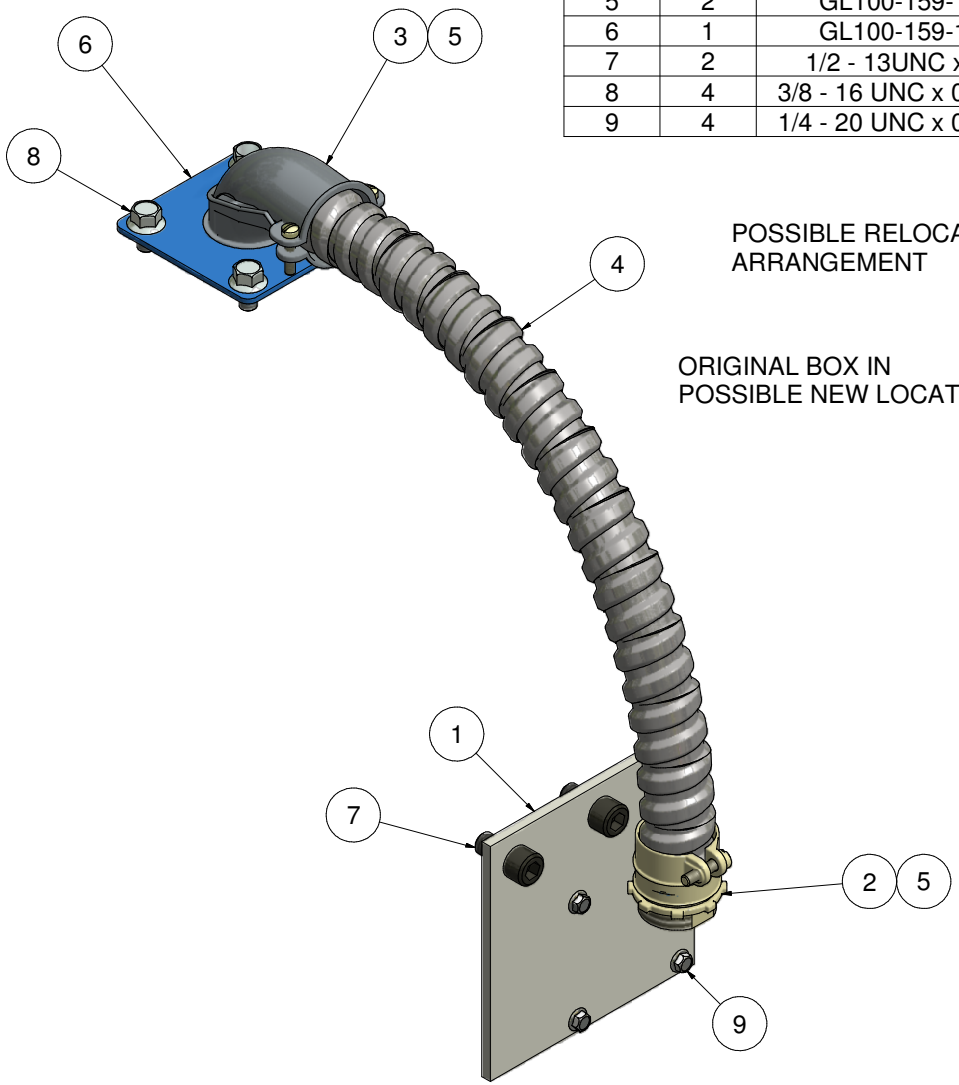

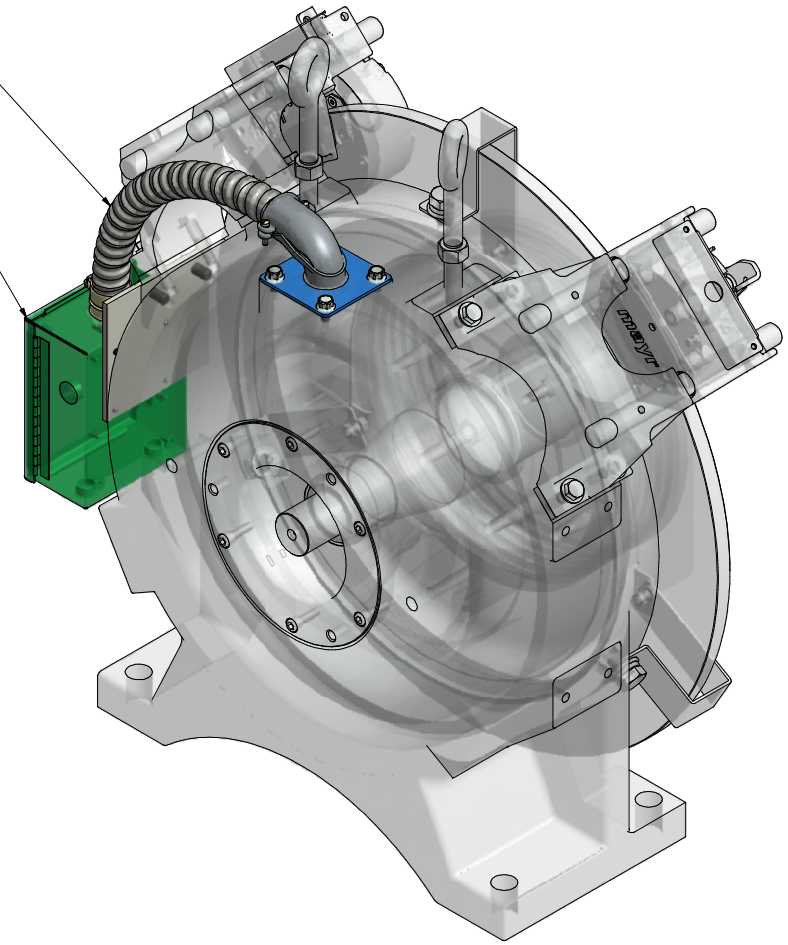

Weight: 9.01 lbmass

TYPICAL USE: WHEN RELOCATING JUNCTION BOX IN-HOUSE AND MOTOR LEADS DO NOT NEED TO BE EXTENDED

						A	PRODUCTION RELEASE, PUR #613	LTL 9/13/13	

HOLLISTER-WHITNEY
ELEVATOR CO.

TITLE: JUNCTION BOX RELOCATION KIT - SIDE MOUNT - IN PLANT

DRAWN BY	SCALE	MATERIAL	DIMENSIONAL TOL.
LTL	NA	SEE PARTS LIST	1 PLACE ±0.01, 2 PLACE ±0.005 3 & 4 PLACE ±0.001, ANGLES ±0.1° REF., OPEN, (NOMINAL) ± 0.0156

SHEET SIZE: C | DATE: 9/13/2013 | **GL100PRK-159**

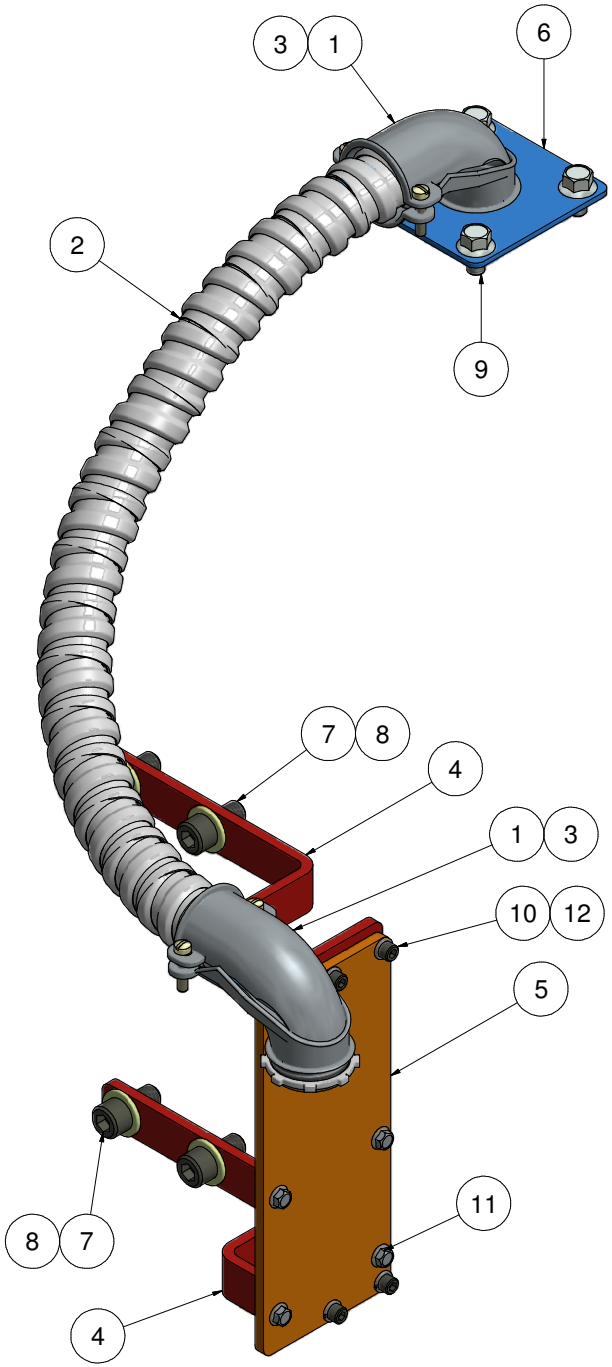

Parts List

ITEM	QTY	PART NUMBER	DESCRIPTION
1	2	GL100-159-13-1	1-1/4 90° BOX CONNECTOR (FLEXCON)
2	1	GL100-159-14-1	1-1/4 FLEX CONDUIT - 4 FT - REF P/N GRF A114
3	2	GL100-159-15	1-1/4 ANTI SHORT BUSHING - REF. P/N THOMAS & BETTS CO. #425
4	2	GL100-159-16	JUNCTION BOX RELOCATION BRACKET
5	1	GL100-159-17	MOUNTING PLATE - FRONT
6	1	GL100-159-18	BOX CONNECTOR PLATE
7	4	1/2 - 13UNC x 1"	SOCKET HEAD CAP SCREW
8	4	1/2" WASHER	STANDARD WASHER
9	4	3/8 - 16 UNC x 0.625"	WHIZ BOLT
10	4	1/4-20 UNC x 0.625	SOCKET HEAD CAP SCREW
11	4	1/4 - 20 UNC x 0.375"	WHIZ BOLT
12	4	1/4" LOCK WASHER	STANDARD LOCK WASHER

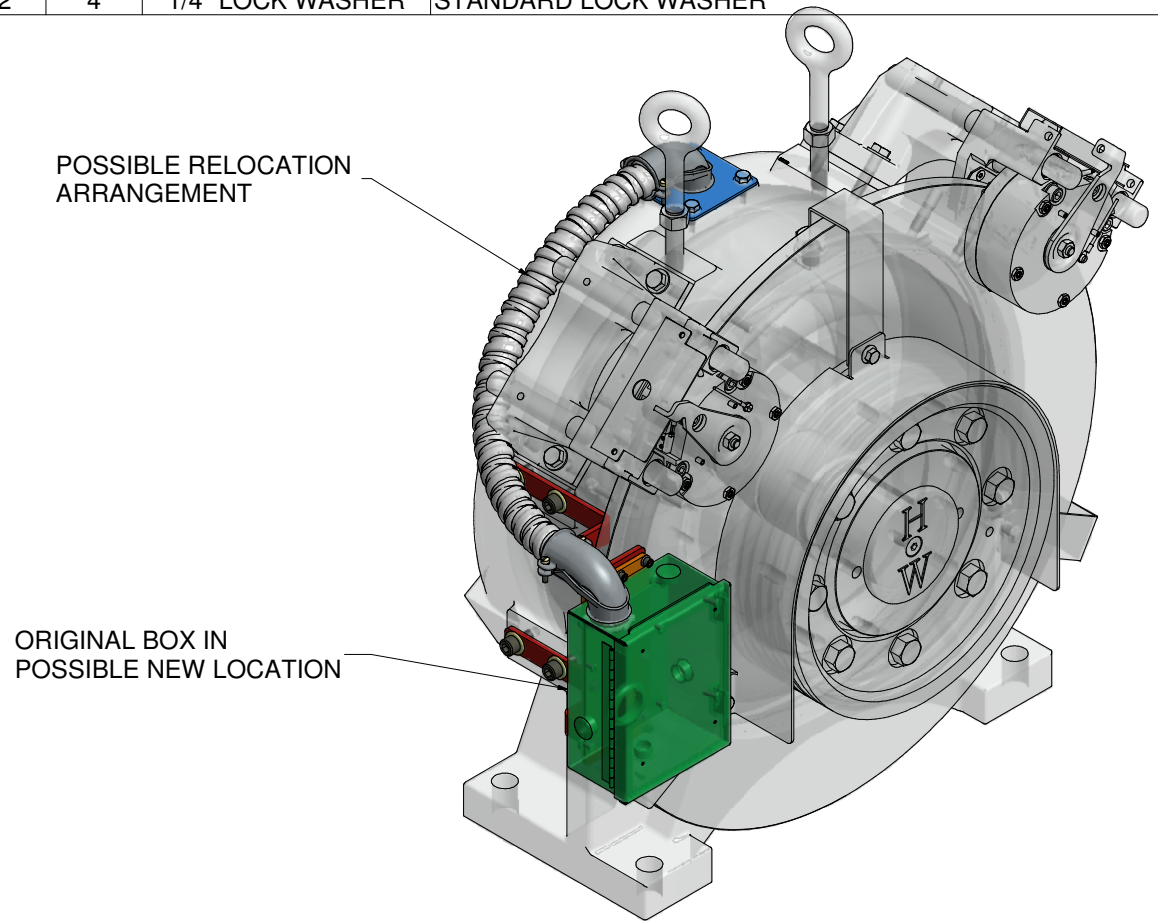

Weight: 11.22 lbmass

						A	PRODUCTION RELEASE, PUR #636	LTL 3/10/14	

HOLLISTER-WHITNEY
ELEVATOR CO.

TITLE: JUNCTION BOX RELOCATION KIT - FRONT MOUNT - IN PLANT

DRAWN BY	SCALE	MATERIAL	DIMENSIONAL TOL.
LTL	NA	SEE PARTS LIST	1 PLACE ±0.01, 2 PLACE ±0.005 3 & 4 PLACE ±0.001, ANGLES ±0.1° REF., OPEN, (NOMINAL) ± 0.0156

SHEET SIZE: C | DATE: 9/13/2013 | **GL100PRK-159F**

Parts List			
ITEM	QTY	PART NUMBER	DESCRIPTION
1	1	GL100-159-11	663 SC - COOPER B-LINE BOX - MODIFIED
2	1	GL100-159-12	MOUNTING PLATE
3	2	GL100-159-13	1-1/4 STRAIGHT BOX CONNECTOR (FLEXCON) - REF P/N BRID412DC2
4	1	GL100-159-14	1-1/4 FLEX CONDUIT - 3FT LENGTH - REF. P/N GRF A114
5	2	GL100-159-15	1-1/4 ANTI SHORT BUSHING - REF. P/N THOMAS & BETTS CO. #425
6	2	1/2 - 13UNC x 1"	SOCKET HEAD CAP SCREW
7	4	1/4 - 20 UNC x 0.375"	WHIZ BOLT

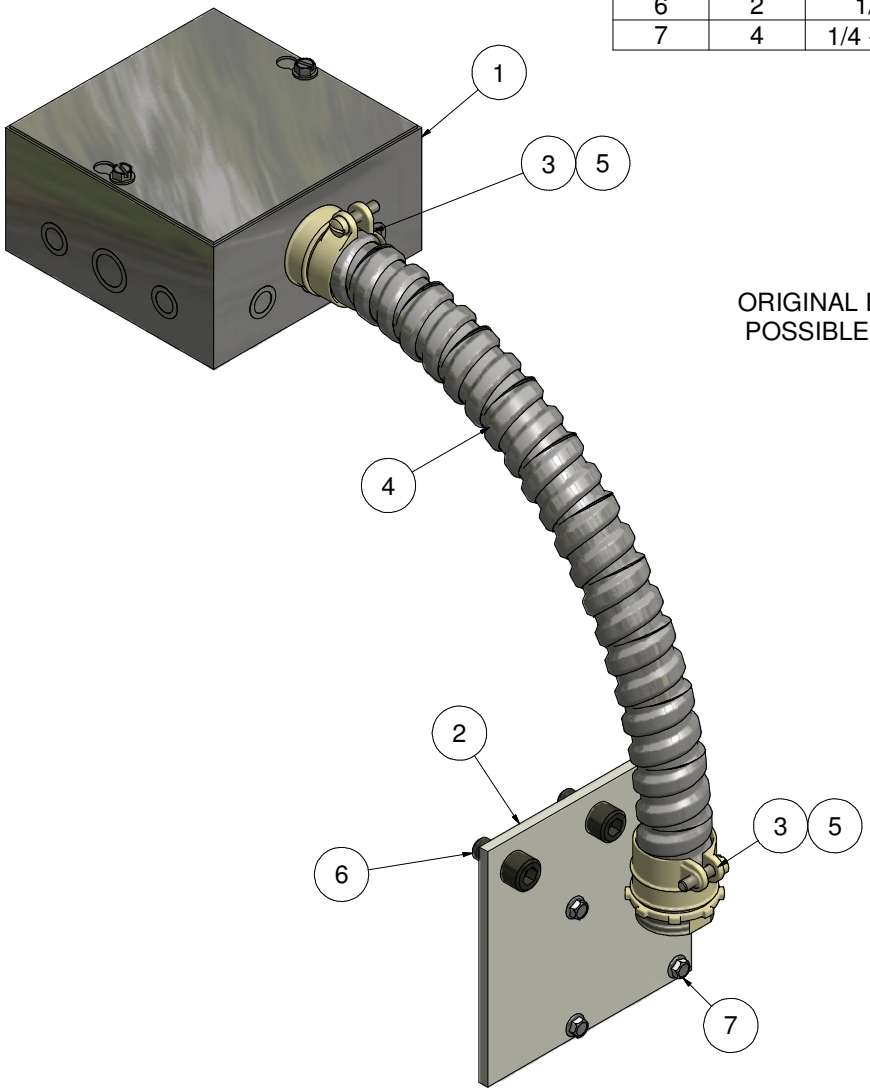

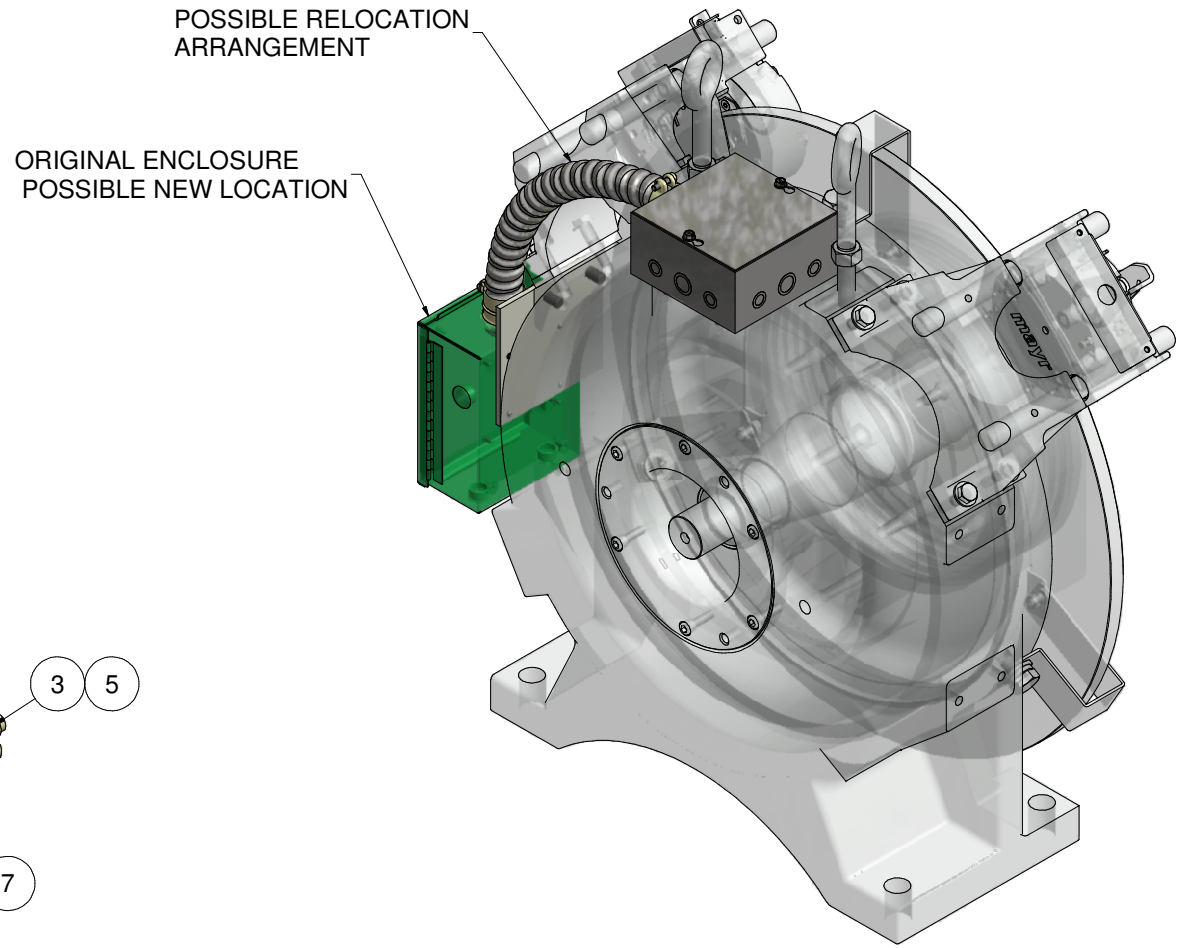

Weight: 11.05 lbmass

TYPICAL USES; WHEN MOTOR LEADS ARE SHORT AND MUST BE EXTENDED FOR JUNCTION BOX RELOCATION; WHEN RELOCATING JUNCTION BOX DUE TO FIELD SITUATION

B	UPDATE, PUR #613	LTL 9/13/13	
A	PRODUCTION RELEASE, PUR #555	LTL 1/4/13	

HOLLISTER-WHITNEY
ELEVATOR CO.

TITLE: ELECTRICAL ENCLOSURE RELOCATION KIT - SMALL FRAME ACGL

DRAWN BY	SCALE	MATERIAL	DIMENSIONAL TOL.
LTL	NA	SEE PARTS LIST	1 PLACE ±0.01, 2 PLACE ±0.005 3 & 4 PLACE ±0.001, ANGLES ±0.1° REF., OPEN, (NOMINAL) ± 0.0156

SHEET SIZE: C | DATE: 12/31/2012 | **GL100RK-159**

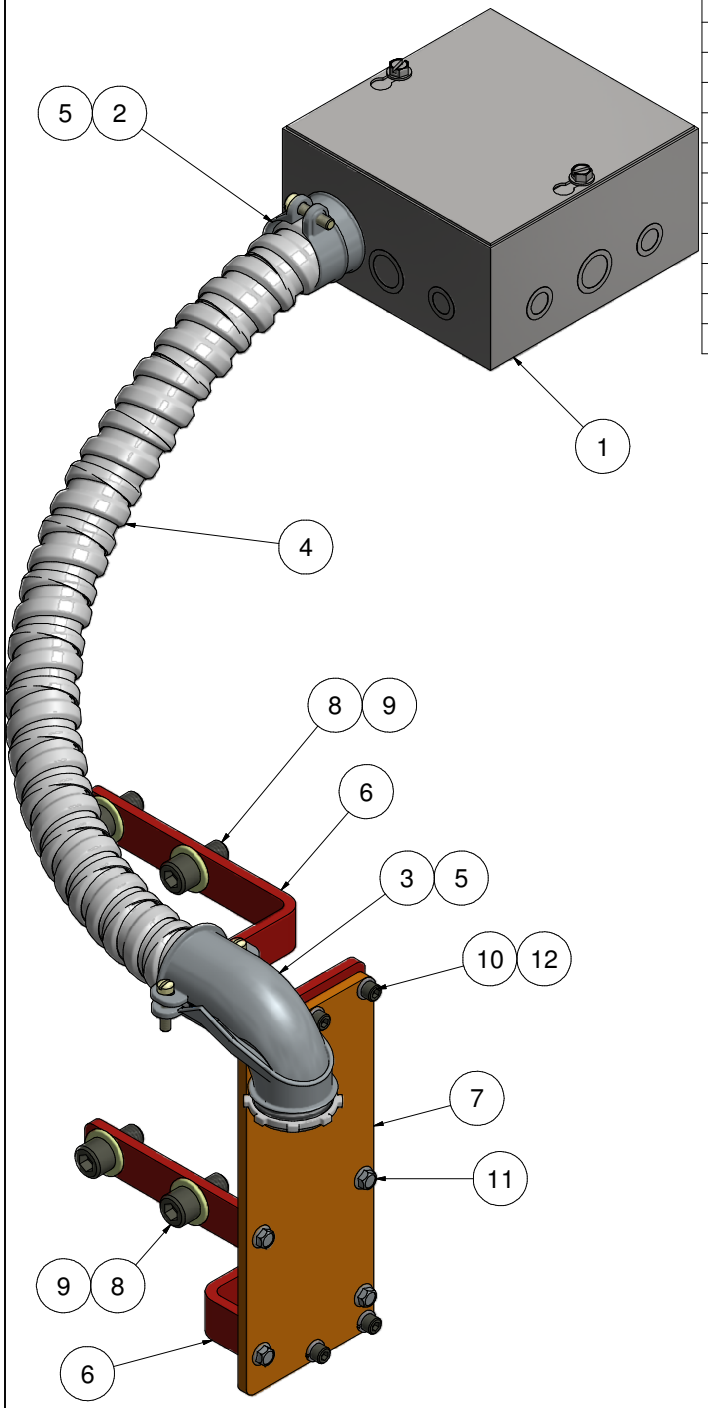

Parts List

ITEM	QTY	PART NUMBER	DESCRIPTION
1	1	GL100-159-11	663 SC - COOPER B-LINE BOX - MODIFIED
2	1	GL100-159-13	1-1/4 STRAIGHT BOX CONNECTOR (FLEXCON) - REF P/N BRID412DC2
3	1	GL100-159-13-1	1-1/4 90° BOX CONNECTOR (FLEXCON)
4	1	GL100-159-14-1	1-1/4 FLEX CONDUIT - 4 FT - REF P/N GRF A114
5	2	GL100-159-15	1-1/4 ANTI SHORT BUSHING - REF. P/N THOMAS & BETTS CO. #425
6	2	GL100-159-16	JUNCTION BOX RELOCATION BRACKET
7	1	GL100-159-17	MOUNTING PLATE - FRONT
8	4	1/2 - 13UNC x 1"	SOCKET HEAD CAP SCREW
9	4	1/2" WASHER	STANDARD WASHER
10	4	1/4-20 UNC x 0.625	SOCKET HEAD CAP SCREW
11	4	1/4 - 20 UNC x 0.375"	WHIZ BOLT
12	4	1/4" LOCK WASHER	STANDARD LOCK WASHER

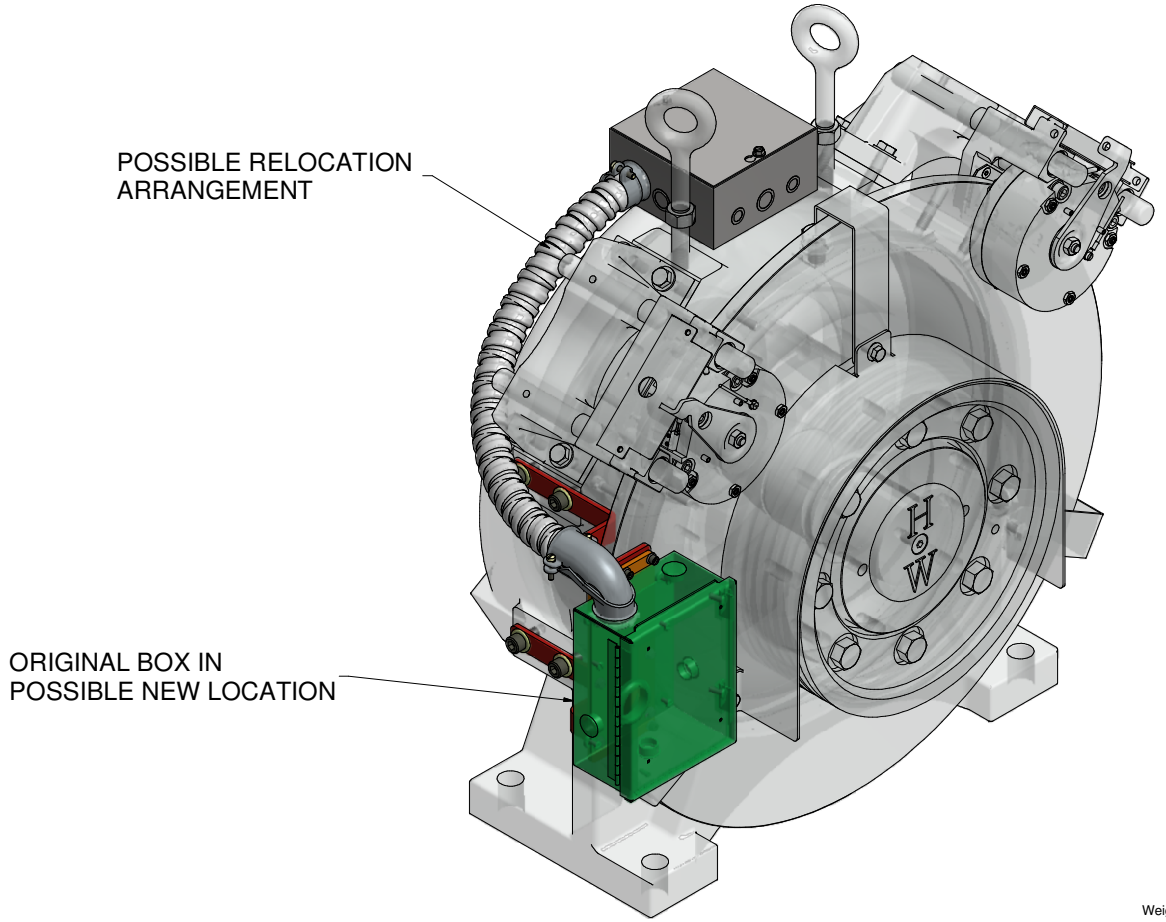

Weight: 13.24 lbmass

						A	PRODUCTION RELEASE, PUR #636	LTL 3/10/14	

HOLLISTER-WHITNEY
ELEVATOR CO.

TITLE: JUNCTION BOX RELOCATION KIT - FRONT MOUNT - FIELD

DRAWN BY	SCALE	MATERIAL	DIMENSIONAL TOL.
LTL	NA	SEE PARTS LIST	1 PLACE ±0.01, 2 PLACE ±0.005 3 & 4 PLACE ±0.001, ANGLES ±0.1° REF., OPEN, (NOMINAL) ± 0.0156

SHEET SIZE: C | DATE: 9/13/2013 | **GL100RK-159F**

Parts List			
ITEM	QTY	PART NUMBER	DESCRIPTION
1	1	GL130A-159-12	MOUNTING PLATE
2	1	GL100-159-13	1-1/4 STRAIGHT BOX CONNECTOR (FLEXCON) - REF P/N BRID412DC2
3	1	GL100-159-13-1	1-1/4 90° BOX CONNECTOR (FLEXCON)
4	1	GL100-159-14	1-1/4 FLEX CONDUIT - REF. P/N GRF A114
5	2	GL100-159-15	1-1/4 ANTI SHORT BUSHING - REF. P/N THOMAS & BETTS CO. #425
6	1	GL100-159-18	BOX CONNECTOR PLATE
7	2	5/8-11 UNC x 1	SOCKET HEAD CAP SCREW
8	4	1/4-20 UNC x 0.5	WHIZ BOLT

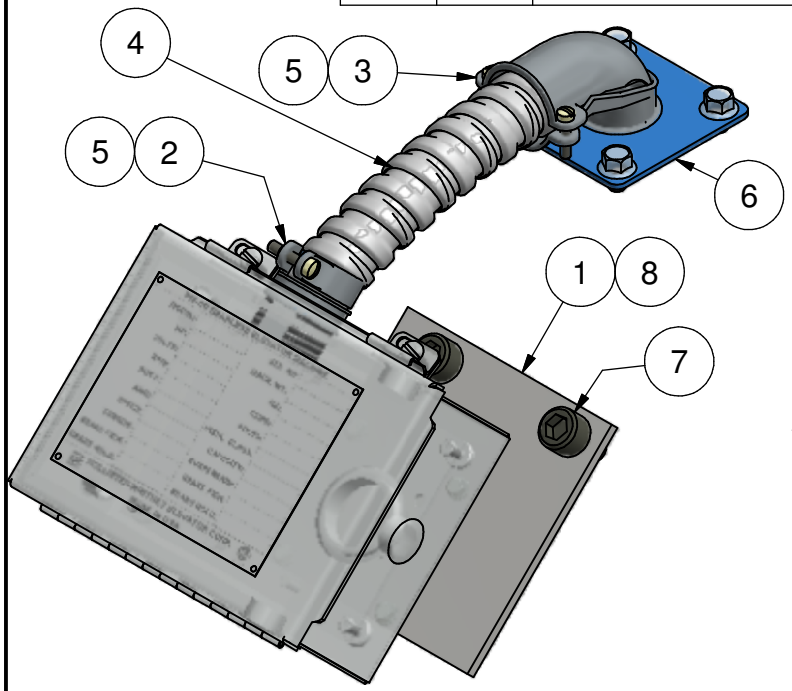

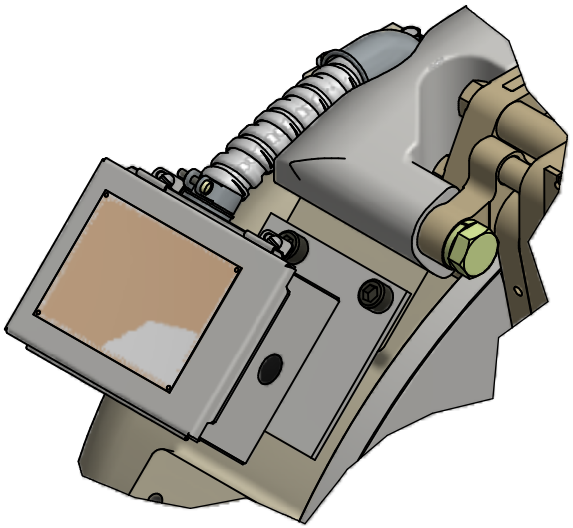

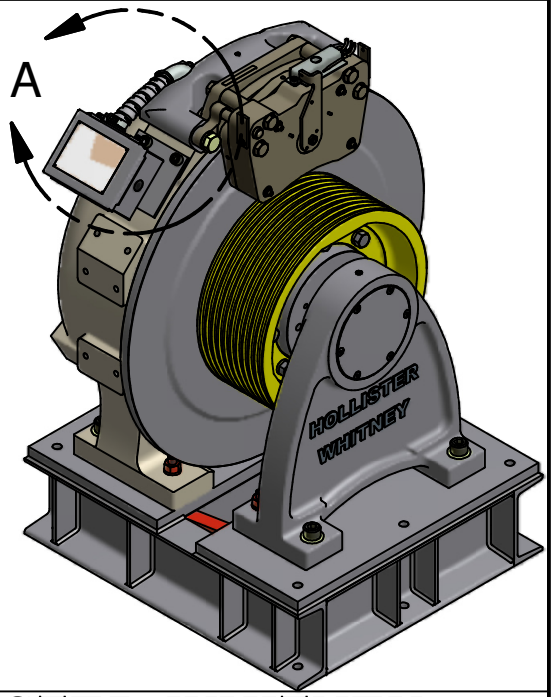

						HOLLISTER-WHITNEY ELEVATOR CO.			
						TITLE ELECTRICAL ENCLOSURE IN-PLANT RELOCATION KIT - LARGE FRAME ACGL			
						DRAWN BY LTL	SCALE NA	MATERIAL SEE PARTS LIST	DIMENSIONAL TOL. 1 PLACE ± 0.01 2 PLACE ± 0.005 3&4 PLACE ± 0.001, ANGLES ± 0.1° REF., OPEN, (NOMINAL) ± 0.0156
			A	PRODUCTION RELEASE, PUR #636	LTL 3/3/14	SHEET SIZE A		DATE 3/3/2014	GL130APRK-159

Parts List			
ITEM	QTY	PART NUMBER	DESCRIPTION
1	1	GL130A-159-11	663 SC - COOPER B-LINE BOX - MODIFIED
2	1	GL130A-159-12	MOUNTING PLATE
3	2	GL100-159-13	1-1/4 STRAIGHT BOX CONNECTOR (FLEXCON) - REF P/N BRID412DC2
4	1	GL100-159-14	1-1/4 FLEX CONDUIT - REF. P/N GRF A114
5	1	GL100-159-15	1-1/4 ANTI SHORT BUSHING (NOT SHOWN) REF. P/N TBCO #425
6	2	5/8-11 UNC x 1	SOCKET HEAD CAP SCREW
7	4	1/4-20 UNC x 0.5	WHIZ BOLT

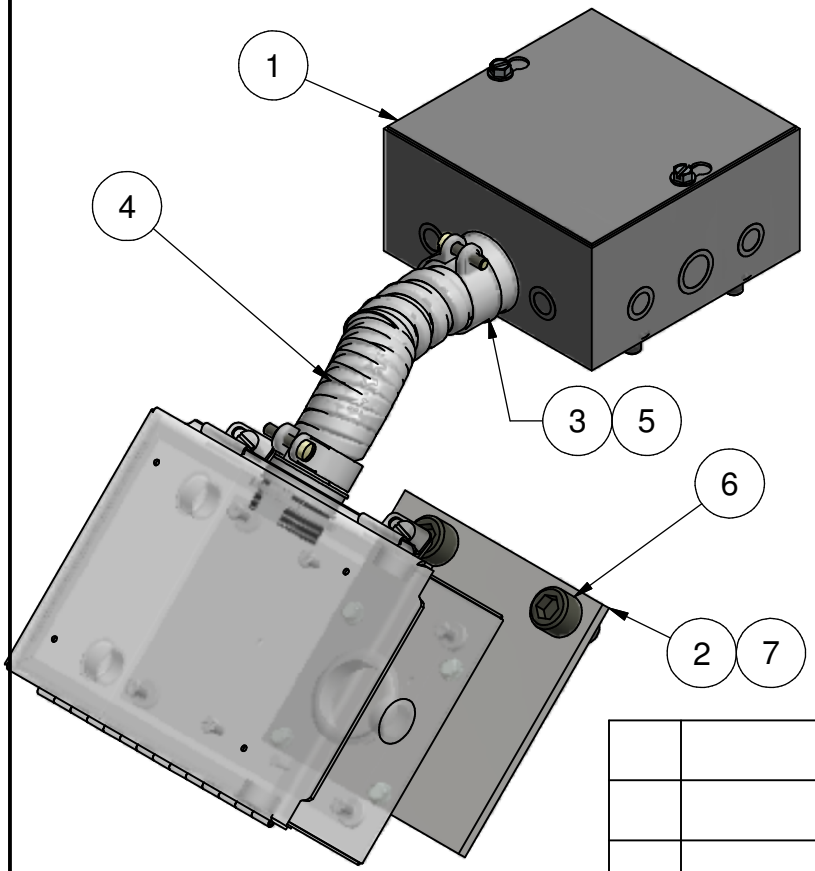

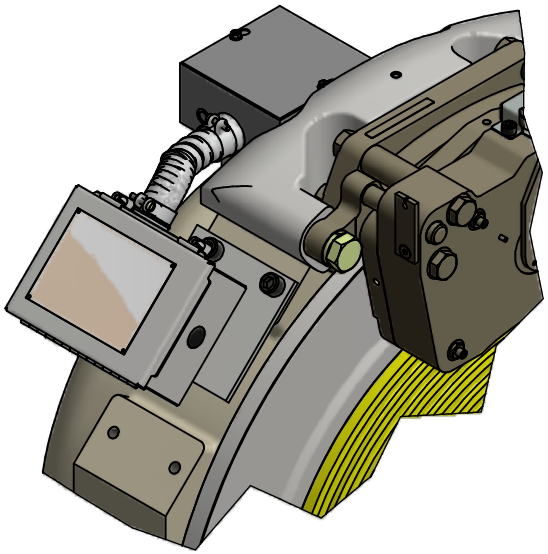

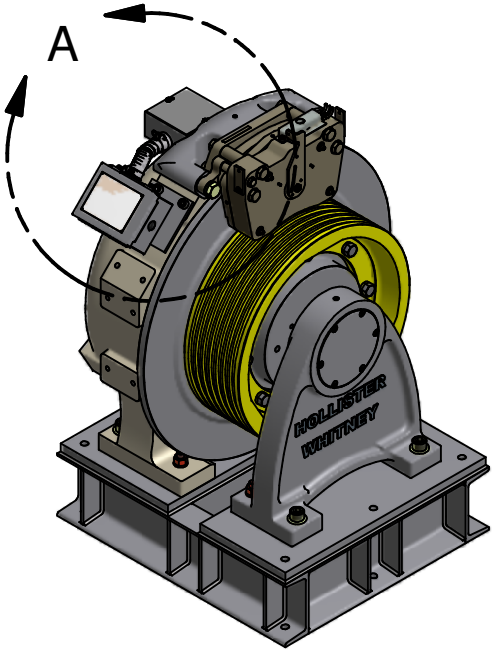

			A	PRODUCTION RELEASE, PUR #606	LTL 7/15/13

HOLLISTER-WHITNEY
ELEVATOR CO.

TITLE ELECTRICAL ENCLOSURE RELOCATION KIT - LARGE FRAME ACGL

DRAWN BY	SCALE	MATERIAL	DIMENSIONAL TOL.
LTL	NA	SEE PARTS LIST	1 PLACE ± 0.01 2 PLACE ± 0.005 3&4 PLACE ± 0.001, ANGLES ± 0.1° REF., OPEN, (NOMINAL) ± 0.0156

SHEET SIZE	DATE	
A	7/15/2013	GL130ARK-159

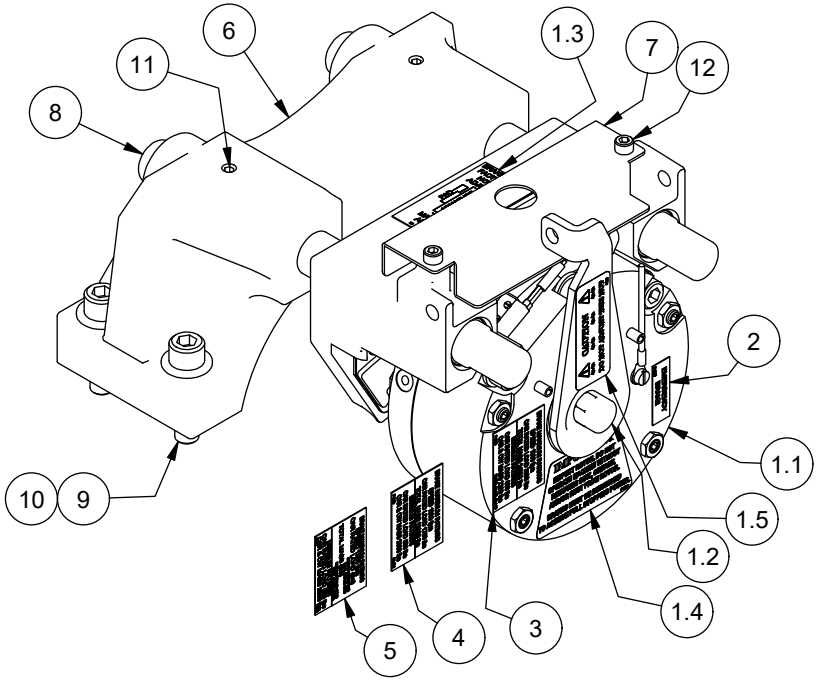

PARTS LIST			
ITEM	QTY	PART NUMBER	DESCRIPTION
1	1	GL100-146-115S	MAYR #6 BRAKE WITH STANDARD STICKERS
1.1	1	GL100-146-115	MAYR #6 RSD6/894.510.03S 52V #8275067
1.2	1	142-050	BLACK VINYL CAP
1.3	1	P-175	TAG, GEARLESS MACHINE BRAKE AIRGAP DATA
1.4	1	P-190	ROTOR INSPECTION & BRAKE BURNISHING STICKER - GEARLESS MACHINE BRAKES
1.5	1	P-229	CAUTION LABEL - DO NOT ADJUST THIS NUT (MAYR GEARLESS BRAKES)
2	1	P-176	TAG, GEARLESS EMERGENCY BRAKE
3	1	P-209	TAG - BRAKE RATINGS FOR MAYR #6
4	1	P-210	TAG, GL101 - BRAKE RATINGS FOR MAYR #6
5	1	P-212	TAG, GL171 - BRAKE RATINGS FOR MAYR #6
6	1	142-001	BRAKE BASE
7	1	146-003	COVER - MAYR #6 ELECTRICAL
8	2	142-012	BRAKE ROD
9	4	1/2-13 UNC x 2"	SOCKET HEAD CAP SCREW
10	4	1/2" WASHER	SAE WASHER
11	2	3/8-16 UNC x 0.375	SET SCREW
12	2	M6 x 1.00 x 8mm	SHCS - Metric

1. FOR USE AS COMPLETE MAYR #6 BRAKE ASSEMBLY REPLACEMENT.
2. TAGS SUPPLIED FOR ALL POSSIBLE MACHINE USAGE.
3. TAGS 2, 3, 4, & 5 APPLIED IN FIELD AS APPROPRIATE.
4. TAGS SHOWN FOR POSITIONING AS NECESSARY.
5. EMERGENCY BRAKE TAG ONLY APPLIED TO EMERGENCY BRAKE.

NOTES:
RATED (HOLD) VOLTAGE: 52 VDC
RATED CURRENT: 1.49 A
NOMINAL (RATED) POWER: 39 W
OVER EXCITATION (PICK) VOLTAGE: 104 VDC
OVER EXCITATION POWER: 155 W
OVER EXCITATION TIME: 1 S

WEIGHT: 34.3 lbmass

			A	PRODUCTION RELEASE, NO PREV. PRINT, PUR #1260	LTL 12/12/19

THIS DRAWING IS SUPPLIED AS A REPRESENTATION OF THE EQUIPMENT HOLLISTER-WHITNEY ELEVATOR CO. LLC ("MANUFACTURER") HAS AGREED TO SUPPLY. SLIGHT ADJUSTMENTS MAY OCCUR DURING MANUFACTURING AND INSTALLATION. ANY MODIFICATIONS NOT APPROVED IN WRITING BY MANUFACTURER MAY AFFECT OPERATION, VOIDS ANY WARRANTY AND RELEASES MANUFACTURER OF ALL LIABILITY.
THIS DOCUMENT CONTAINS CONFIDENTIAL AND PROPRIETARY INFORMATION THAT CANNOT BE REPRODUCED OR DIVULGED, IN WHOLE OR IN PART, WITHOUT WRITTEN AUTHORIZATION FROM THE MANUFACTURER.

THIRD ANGLE PROJECTION

HOLLISTER-WHITNEY
ELEVATOR CO. LLC

TITLE
REPLACEMENT BRAKE ASSEMBLY - COMPLETE MAYR #6

DRAWN BY	SCALE	MATERIAL	REFERENCE TOL.
LTL	1 / 4	SEE PARTS LIST	ALL DIMENSIONS REFERENCE UNLESS OTHERWISE SPECIFIED

SHEET SIZE	DATE	
A	12/11/2019	GL100-146A SHEET 1 OF 1

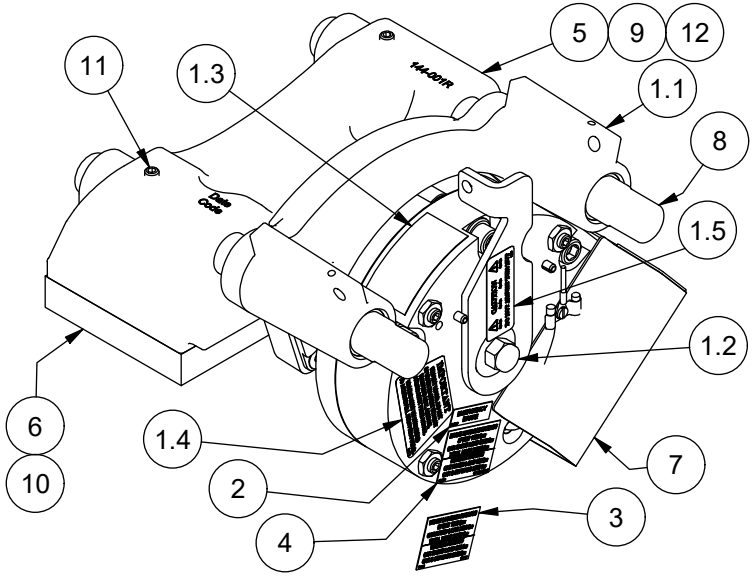

1. FOR USE AS COMPLETE MAYR #8 BRAKE ASSEMBLY REPLACEMENT.
2. TAGS SUPPLIED FOR ALL POSSIBLE MACHINE USAGE.
3. TAGS 2, 3, & 4 APPLIED IN FIELD AS APPROPRIATE.
4. TAGS SHOWN FOR POSITIONING AS NECESSARY.
5. EMERGENCY BRAKE TAG ONLY APPLIED TO EMERGENCY BRAKE.

NOTES:
RATED (HOLD) VOLTAGE: 52 VDC
RATED CURRENT: 2.27 A
NOMINAL (RATED) POWER: 59 W
OVER EXCITATION (PICK) VOLTAGE: 104 VDC
OVER EXCITATION POWER: 236 W
OVER EXCITATION TIME: 1 S

PARTS LIST

ITEM	QTY	PART NUMBER	DESCRIPTION
1	1	GL130-144-115S	MAYR #8 BRAKE WITH STANDARD STICKERS
1.1	1	GL130-144-115	MAYR #8; RSD8/894.510.03S 52V #8275066
1.2	1	142-050	BLACK VINYL CAP
1.3	1	P-175	TAG, GEARLESS MACHINE BRAKE AIRGAP DATA
1.4	1	P-190	ROTOR INSPECTION & BRAKE BURNISHING STICKER - GEARLESS MACHINE BRAKES
1.5	1	P-229	CAUTION LABEL - DO NOT ADJUST THIS NUT (MAYR GEARLESS BRAKES)
2	1	P-176	TAG, GEARLESS EMERGENCY BRAKE
3	1	P-211	TAG, GL131 - BRAKE RATINGS FOR MAYR #8
4	1	P-213	TAG, GL130 & GL170 - BRAKE RATINGS FOR MAYR #8
5	1	144-001	BRAKE BASE
6	1	144-002	ADAPTOR PLATE - BRAKE BASE
7	1	144-003	COVER - MAYR #8 ELECTRICAL
8	2	144-012	BRAKE ROD
9	4	1/2-13 UNC x 1.75	HEX CAP SCREW
10	4	1/2-13 UNC x 1.5	FLAT HEAD CAP SCREW
11	2	3/8-16 UNC x 0.625	SET SCREW
12	4	1/2" WASHER	SAE WASHER

WEIGHT: 122.9 lbmass

			A	PROD. RELEASE, NO PREV. PRINT, PUR #1260	LTL 12/18/19

THIS DRAWING IS SUPPLIED AS A REPRESENTATION OF THE EQUIPMENT HOLLISTER-WHITNEY ELEVATOR CO. LLC ("MANUFACTURER") HAS AGREED TO SUPPLY. SLIGHT ADJUSTMENTS MAY OCCUR DURING MANUFACTURING AND INSTALLATION. ANY MODIFICATIONS NOT APPROVED IN WRITING BY MANUFACTURER MAY AFFECT OPERATION, VOIDS ANY WARRANTY AND RELEASES MANUFACTURER OF ALL LIABILITY.
THIS DOCUMENT CONTAINS CONFIDENTIAL AND PROPRIETARY INFORMATION THAT CANNOT BE REPRODUCED OR DIVULGED, IN WHOLE OR IN PART, WITHOUT WRITTEN AUTHORIZATION FROM THE MANUFACTURER.

THIRD ANGLE PROJECTION

HOLLISTER-WHITNEY
ELEVATOR CO. LLC

TITLE
REPLACEMENT BRAKE ASSEMBLY - COMPLETE MAYR#8

DRAWN BY	SCALE	MATERIAL	REFERENCE TOL.
LTL	1 / 5	SEE PARTS LIST	ALL DIMENSIONS REFERENCE UNLESS OTHERWISE SPECIFIED

SHEET SIZE	DATE	
A	12/18/2019	GL130-144A SHEET 1 OF 1

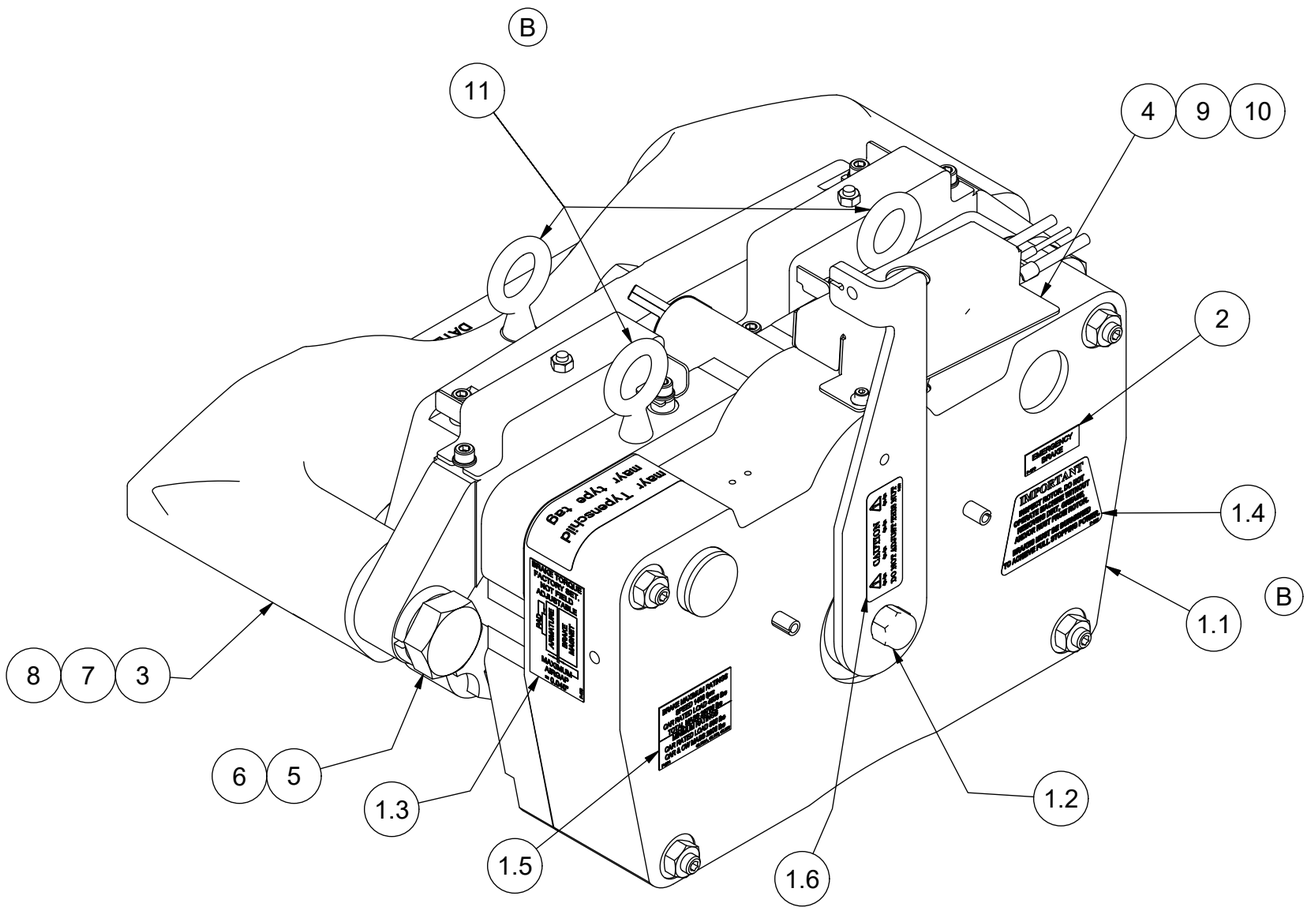

PARTS LIST			
ITEM	QTY	PART NUMBER	DESCRIPTION
1	1	GL185-147-115S	MAYR #10.1 BRAKE WITH STANDARD STICKERS
1.1	1	GL185-147-115	MAYR #10.1 BRAKE - RSD10/894.510.53S #8252206
1.2	1	142-050	BLACK VINYL CAP
1.3	1	P-175	TAG, GEARLESS MACHINE BRAKE AIRGAP DATA
1.4	1	P-190	ROTOR INSPECTION & BRAKE BURNISHING STICKER - GEARLESS MACHINE BRAKES
1.5	1	P-214	TAG, GL130A, GL185 & GL260 - BRAKE RATINGS FOR MAYR #10
1.6	1	P-229	CAUTION LABEL - DO NOT ADJUST THIS NUT (MAYR GEARLESS BRAKES)
2	1	P-176	TAG, GEARLESS EMERGENCY BRAKE
3	1	147-001	BRAKE BASE - LARGE FRAME GL MACHINE
4	1	147-003	COVER - MAYR #10.1 (GL185-147) ELECTRICAL
5	2	1" - 8 UNC x 3 1/2"	HEX CAP SCREW
6	2	1" WASHER	STANDARD LOCK WASHER
7	4	5/8-11 UNC x 2.5	SOCKET HEAD CAP SCREW
8	4	5/8 WASHER	STANDARD WASHER
9	1	M4 x 0.7 x 8mm	SOCKET HEAD CAP SCREW (METRIC)
10	1	#8 WASHER	STANDARD WASHER
11	3	147-051	LIFTING EYEBOLT - FORGED MACHINERY

NOTES:

DUE TO MODELING LIMITATIONS, WIRES ARE NOT SHOWN IN PROPER LOCATION WITH COVER IN THIS VIEW.

RATED (HOLD) VOLTAGE: 52 VDC
RATED CURRENT: 3.62 A
NOMINAL (RATED) POWER: 94 W
OVER EXCITATION (PICK) VOLTAGE: 104 VDC
OVER EXCITATION POWER: 377 W
OVER EXCITATION TIME: 1 S

WEIGHT: 249.1 lbmass

1. FOR USE AS COMPLETE MAYR #10.1 (OR #10) BRAKE ASSEMBLY REPLACEMENT.
2. TAGS SUPPLIED FOR ALL POSSIBLE MACHINE USAGE.
3. TAGS SHOWN FOR POSITIONING AS NECESSARY
4. TAG 2, EMERGENCY BRAKE TAG P-176, APPLIED IN FIELD AS APPROPRIATE.
5. EMERGENCY BRAKE TAG ONLY APPLIED TO EMERGENCY BRAKE.

			C	UPDATE BRAKE BASE MODEL, PUR #1621	LTL 3/30/22
			B	ADD LIFTING EYEBOLTS, PUR #1635	LTL 3/24/22
			A	PROD. RELEASE, NO PREV. PRINT, PUR #1260	LTL 1/6/20

THIS DRAWING IS SUPPLIED AS A REPRESENTATION OF THE EQUIPMENT HOLLISTER-WHITNEY ELEVATOR CO. LLC ("MANUFACTURER") HAS AGREED TO SUPPLY. SLIGHT ADJUSTMENTS MAY OCCUR DURING MANUFACTURING AND INSTALLATION. ANY MODIFICATIONS NOT APPROVED IN WRITING BY MANUFACTURER MAY AFFECT OPERATION, VOIDS ANY WARRANTY AND RELEASES MANUFACTURER OF ALL LIABILITY.
THIS DOCUMENT CONTAINS CONFIDENTIAL AND PROPRIETARY INFORMATION THAT CANNOT BE REPRODUCED OR DIVULGED, IN WHOLE OR IN PART, WITHOUT WRITTEN AUTHORIZATION FROM THE MANUFACTURER.

THIRD ANGLE PROJECTION

HOLLISTER-WHITNEY
ELEVATOR CO. LLC

TITLE
REPLACEMENT BRAKE ASSEMBLY - COMPLETE MAYR #10.1 (OR #10)

DRAWN BY	SCALE	MATERIAL	REFERENCE TOL.
LTL	1 / 3	SEE MATERIAL LIST	ALL DIMENSIONS REFERENCE UNLESS OTHERWISE SPECIFIED

SHEET SIZE	DATE	
B	1/6/2020	GL185-147A SHEET 1 OF 1

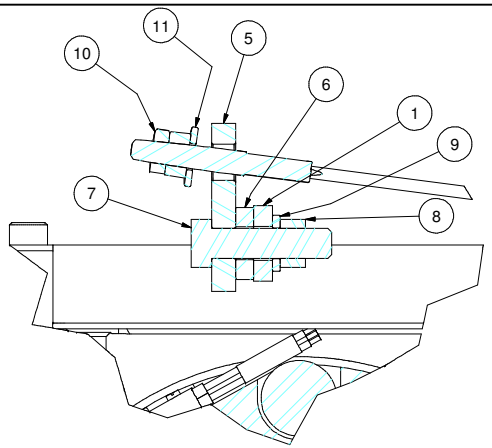

DETAIL A

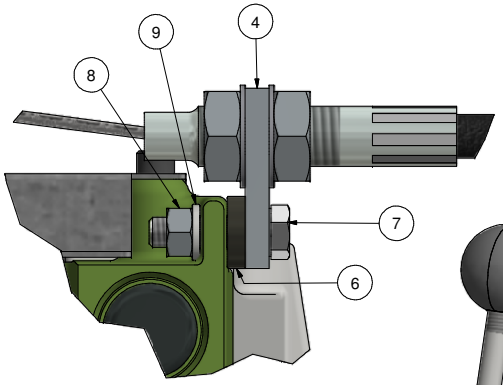

DETAIL B

ITEM	QUANTITY		PART NUMBER	DESCRIPTION
	1 BRAKE	2 BRAKES		
1	1	2	GL100-146	DISC BRAKE (MAYR #6) ASSEMBLY ON MACHINE - SHOWN HERE FOR BRAKE LEVER HARDWARE ATTACHMENT
2	1	1	142-047	MANUAL BRAKE RELEASE ASSEMBLY W/O CABLE - AC GEARLESS MACHINE
3	1	2	142-047- _ _ _	MANUAL BRAKE RELEASE CABLE ASSEMBLY (SEE PRINT 142-047-096)
4	1	2	144-047-8	CABLE GUIDE
5	1	2	144-047-9	CABLE PIVOT
6	2	4	146-049	SPACER WASHER
7	2	4	5/16 UNC x 1.25	HEX HEAD CAP SCREW
8	2	4	5/16 - 18 UNC	HEX NUT
9	2	4	5/16 WASHER	STANDARD LOCK
10	1	2	1/4 - 28 UNF	JAM NUT
11	3	7	1/4" WASHER	STANDARD WASHER
12	1	0	1/4 X .75" (#10-24)	SHOULDER BOLT (1 BRAKE)
13	1	1	#10 - 24UNC	NYLOCK NUT
14	0	1	1/4 X 1.5" (#10-24)	SHOULDER BOLT (2 BRAKES)

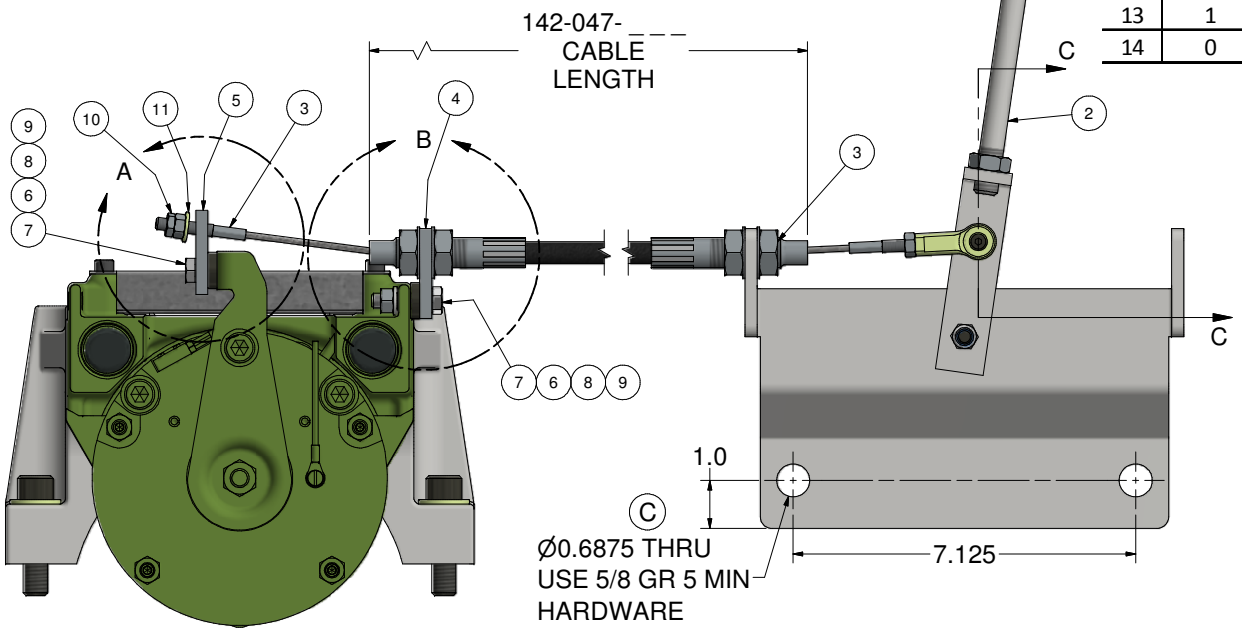

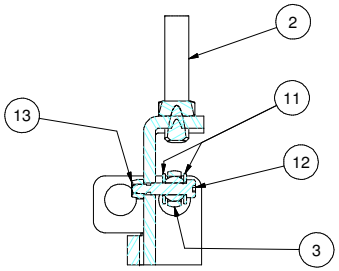

SECTION C-C
SET-UP FOR SINGLE BRAKE

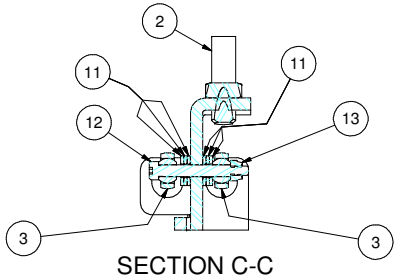

SECTION C-C
SET-UP FOR 2 BRAKES

C	ADD DIMENSIONS, HARD-WARE NOTE, PUR #808	LTL 11/3/16	
B	P/N CORRECTED WAS 146-047M8, PUR #774	LTL 4/4/16	
A	PRODUCTION RELEASE, PUR #714	LTL 9/11/15	

HOLLISTER-WHITNEY
ELEVATOR CO.

TITLE: MANUAL BRAKE RELEASE ASSEMBLY - MAYR #6

DRAWN BY: LTL | SCALE: NA | MATERIAL: SEE PARTS LIST | DIMENSIONAL TOL. 1 PLACE ±0.01, 2 PLACE ±0.005, 3 & 4 PLACE ±0.001, ANGLES ±0.1°, REF., OPEN, (NOMINAL) ± 0.0156

SHEET SIZE: C | DATE: 9/10/2015 | B | 146-047M6

ITEM	QUANTITY		PART NUMBER	DESCRIPTION
	1 BRAKE	2 BRAKES		
1	1	2	GL130-144	DISC BRAKE (MAYR #8) ASSEMBLY ON MACHINE - SHOWN HERE FOR BRAKE LEVER HARDWARE ATTACHMENT
2	1	1	142-047	MANUAL BRAKE RELEASE ASSEMBLY W/O CABLE - AC GEARLESS MACHINE
3	1	2	142-047- ___	MANUAL BRAKE RELEASE CABLE ASSEMBLY (SEE PRINT 142-047-096)
4	1	2	144-047-8	CABLE GUIDE
5	1	2	144-047-9	CABLE PIVOT
6	2	4	5/16 UNC x 1.25	HEX HEAD CAP SCREW
7	2	4	5/16 - 18 UNC	HEX NUT
8	2	4	5/16 WASHER	STANDARD LOCK
9	1	2	1/4 - 28 UNF	JAM NUT
10	3	7	1/4" WASHER	STANDARD WASHER
11	1	0	1/4 X .75" (#10-24)	SHOULDER BOLT (SINGLE BRAKE)
12	1	1	#10 - 24UNC	NYLOCK NUT
13	0	1	1/4 X 1.5" (#10-24)	SHOULDER BOLT (TWO BRAKES)

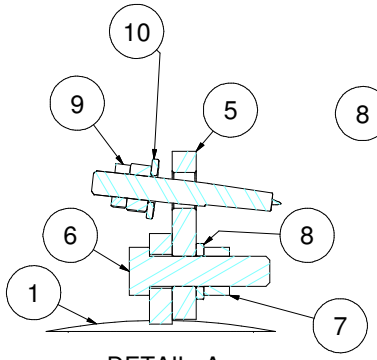

DETAIL A

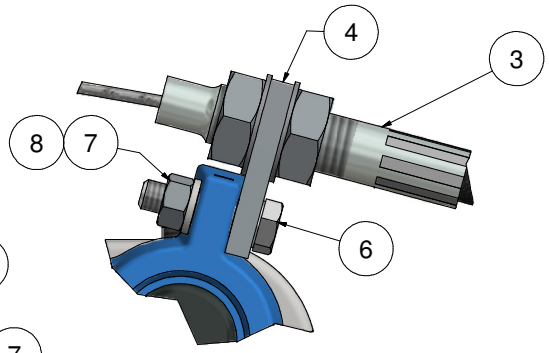

DETAIL B

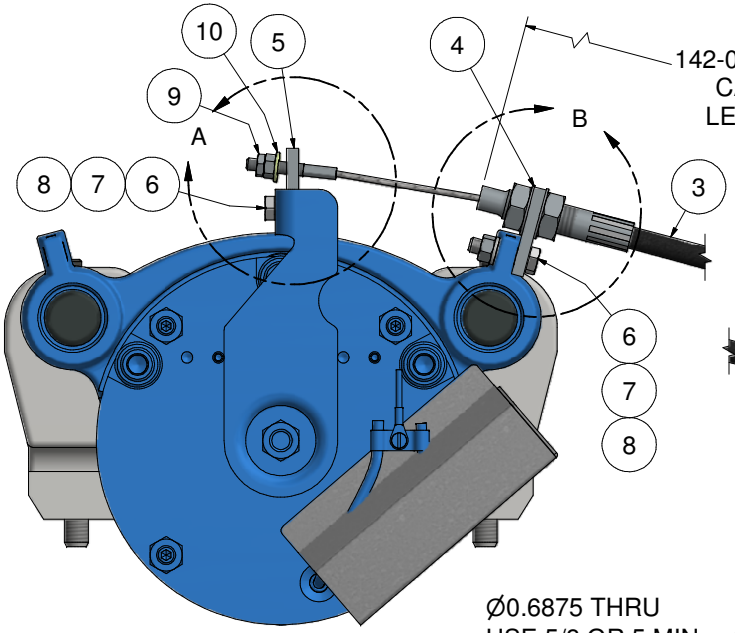

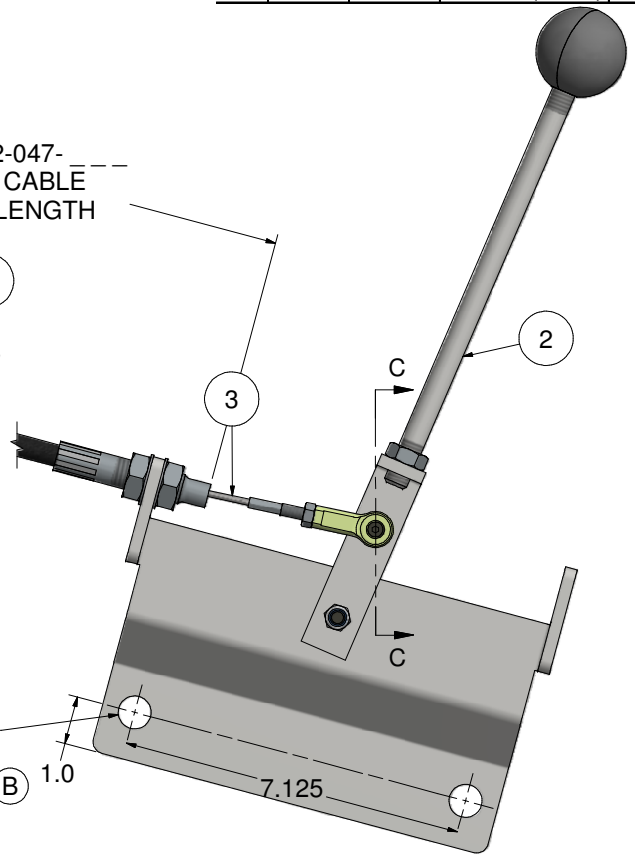

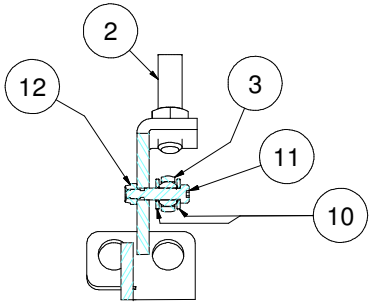

SECTION C-C
SET-UP FOR SINGLE BRAKE

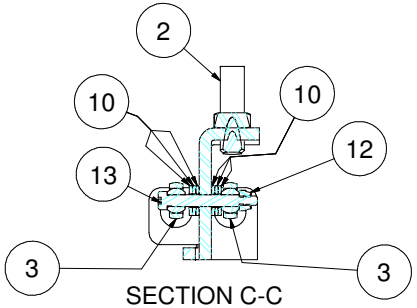

SECTION C-C
SET-UP FOR 2 BRAKES

B	ADD DIMENSIONS, HARD-WARE NOTE, PUR #808	LTL 11/3/16							
A	PRODUCTION RELEASE, PUR #714	LTL 9/10/15							

HOLLISTER-WHITNEY
ELEVATOR CO.

TITLE: MANUAL BRAKE RELEASE ASSEMBLY - MAYR #8

DRAWN BY	SCALE	MATERIAL	DIMENSIONAL TOL.
LTL	NA	SEE PARTS LIST	1 PLACE ±0.01, 2 PLACE ±0.005 3 & 4 PLACE ±0.001, ANGLES ±0.1° REF., OPEN, (NOMINAL) ± 0.0156

SHEET SIZE: C | DATE: 9/10/2015 | **144-047M8**

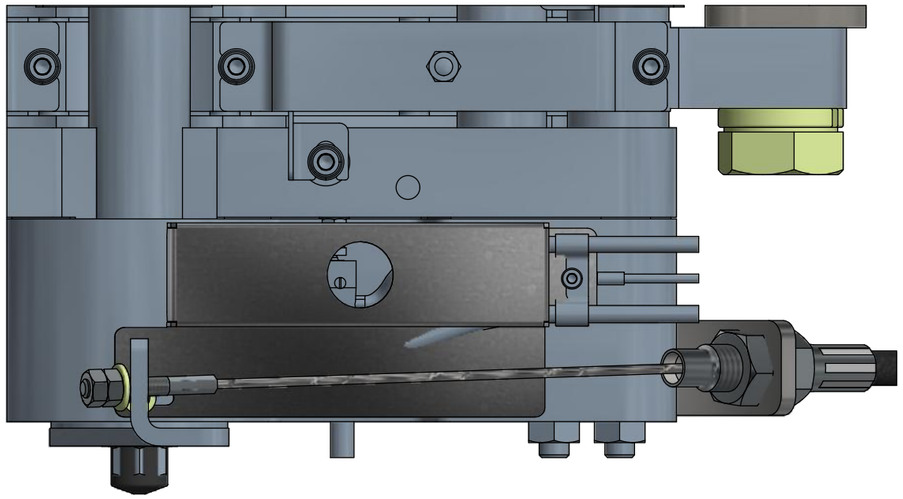

SECTION A-A
SCALE 1 / 2

PARTS LIST			
ITEM	QTY	PART NUMBER	DESCRIPTION
1	1	GL185-147	NOT INCLUDED - SHOWN HERE FOR ATTACHMENT OF HARDWARE - DISC BRAKE ASSEMBLY ON MACHINE
2	1	147-047	Mayr#10 MANUAL BRAKE RELEASE ASSEMBLY W/O CABLE - AC GEARLESS MACHINE
3	1	147-047-18	CABLE GUIDE BRACKET
4	1	147-047-096	MANUAL BRAKE RELEASE CABLE - 8' (96") STANDARD LG.
5	1	M8 x 1.25 x 16mm	FH MACHINE SCREW - METRIC
6	1	0.25 x 0.75"	SHOULDER BOLT (#10-24)
7	2	1/4" WASHER	STANDARD WASHER
8	1	#10 - 24UNC	NYLOCK NUT

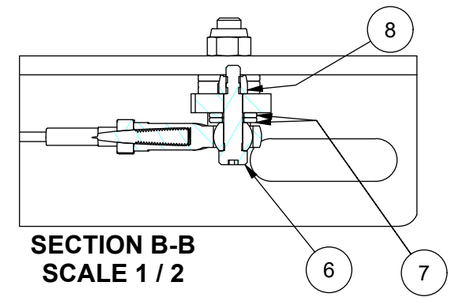

SECTION B-B
SCALE 1 / 2

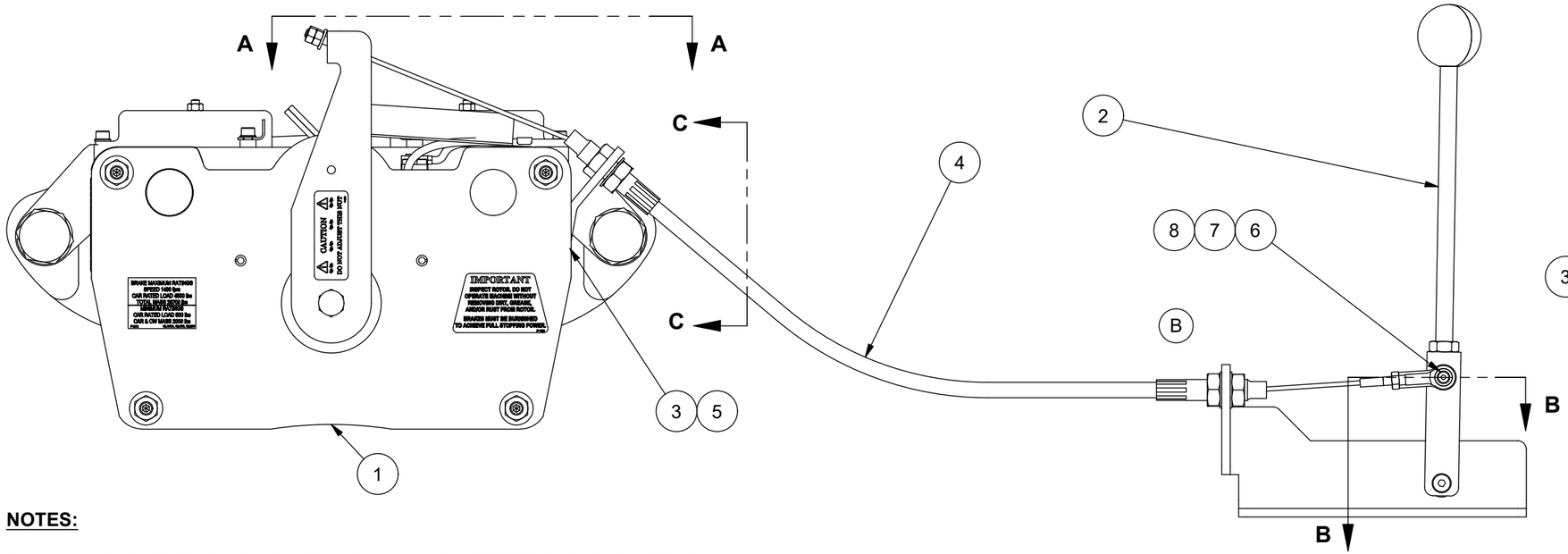

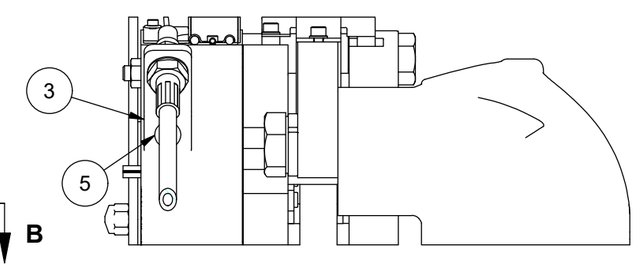

SECTION C-C
SCALE 1 / 4

WEIGHT: 8.0 lbmass

NOTES:

MAXIMUM CABLE (CASING) LENGTH IS 8' (96"). SHORTER CABLE LENGTHS MAY BE AVAILABLE BY SPECIAL ORDER.

C

CABLE BEND RADIUS IS RECOMMENDED TO BE GREATER THAN 12" RADIUS AND MUST NOT BE BELOW 6" MINIMUM RADIUS

FOR SINGLE MAYR #10 (GL185-143) OR 10.1 (GL185-147) ONLY. IF SECOND (EMERGENCY) BRAKE IS PRESENT, TWO MANUAL BRAKE RELEASE ASSEMBLIES (ONE FOR EACH BRAKE) MUST BE USED.

ADDITIONAL MODIFICATION TO BRAKE RELEASE ARM MAY BE NECESSARY IF MANUAL BRAKE RELEASE ASSEMBLY WAS NOT FACTORY INSTALLED.

			B	142-047- _ _ _, & 147-047-8, REMOVE	LTL 9/14/18
C	ADD MAX LENGTH & MIN. BEND RADIUS, PUR #1344	LTL 6/2/20		143-050 & 143-051, PUR #1002	
B	147-047, 147-047-096, & 147-047-18 WAS 142-047,	LTL 9/14/18	A	PRODUCTION RELEASE, PUR #903	LTL 3/26/18

THIS DRAWING IS SUPPLIED AS A REPRESENTATION OF THE EQUIPMENT HOLLISTER-WHITNEY ELEVATOR CO. LLC ("MANUFACTURER") HAS AGREED TO SUPPLY. SLIGHT ADJUSTMENTS MAY OCCUR DURING MANUFACTURING AND INSTALLATION. ANY MODIFICATIONS NOT APPROVED IN WRITING BY MANUFACTURER MAY AFFECT OPERATION, VOIDS ANY WARRANTY AND RELEASES MANUFACTURER OF ALL LIABILITY.
THIS DOCUMENT CONTAINS CONFIDENTIAL AND PROPRIETARY INFORMATION THAT CANNOT BE REPRODUCED OR DIVULGED, IN WHOLE OR IN PART, WITHOUT WRITTEN AUTHORIZATION FROM THE MANUFACTURER.

THIRD ANGLE PROJECTION

HOLLISTER-WHITNEY
ELEVATOR CO. LLC

TITLE
MANUAL BRAKE RELEASE ASSEMBLY - MAYR #10.1

DRAWN BY	SCALE	MATERIAL	REFERENCE TOL.
LTL	1 / 4	SEE PARTS LIST	ALL DIMENSIONS REFERENCE UNLESS OTHERWISE SPECIFIED
SHEET SIZE: B		DATE: 3/26/2018	147-047M10 SHEET 1 OF 1

PARTS LIST			
ITEM	QTY	PART NUMBER	DESCRIPTION
1	1	146-030-01A	ALIGNMENT BRACKET - LEFT HAND
2	1	146-030-01B	ALIGNMENT BRACKET - RIGHT HAND
3	4	146-030-05	M6 - 1 x 12mm SHCS
4	4	147-030-06	M6 STANDARD WASHER
5	2	146-030-07	BUSHING

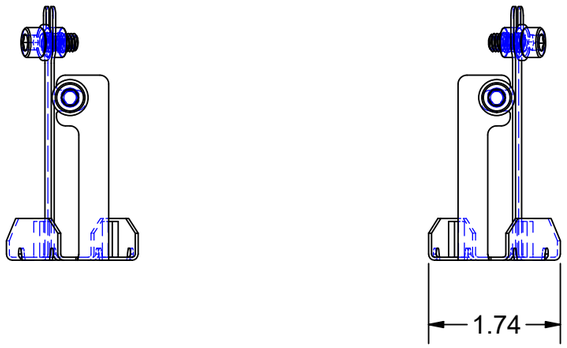

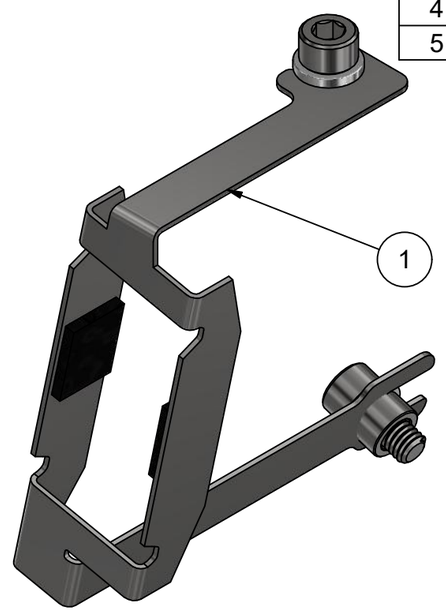

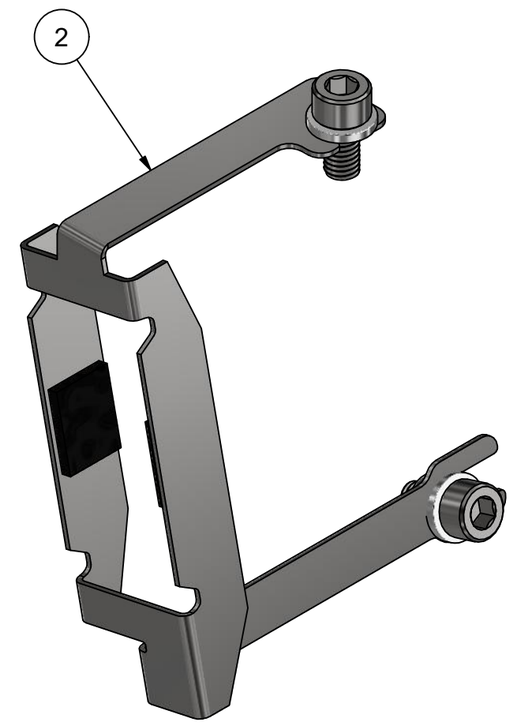

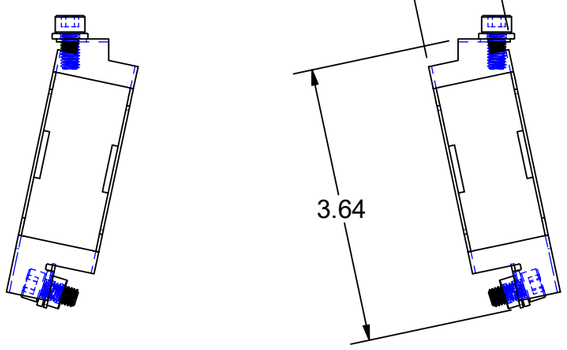

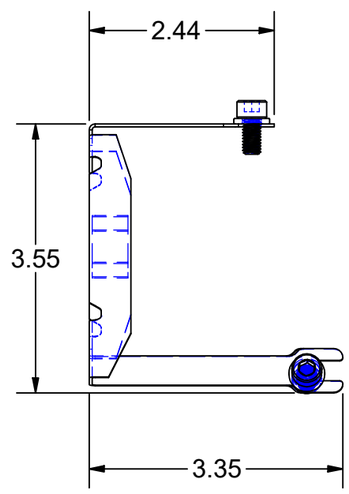

SCALE 1:1

WEIGHT: 0.227 lbmass

NOTES:

1. **USE WITH MAYR #6 BRAKE, ARTICLE # (PART #) 8275067 AND LATER**
2. **SEE PAGE 2 OF 2 FOR PARTS IDENTIFICATION BREAKDOWN AND EXPLODED VIEWS**
3. **PARTS LIST FOR ASSEMBLY-TO-BRAKE REFERENCE ONLY. PARTS ONLY AVAILABLE AS AN ASSEMBLY.**

			A	PRODUCTION RELEASE, PUR #1099	LTL 12/6/19

THIS DRAWING IS SUPPLIED AS A REPRESENTATION OF THE EQUIPMENT HOLLISTER-WHITNEY ELEVATOR CO. LLC ("MANUFACTURER") HAS AGREED TO SUPPLY. SLIGHT ADJUSTMENTS MAY OCCUR DURING MANUFACTURING AND INSTALLATION. ANY MODIFICATIONS NOT APPROVED IN WRITING BY MANUFACTURER MAY AFFECT OPERATION, VOIDS ANY WARRANTY AND RELEASES MANUFACTURER OF ALL LIABILITY.
THIS DOCUMENT CONTAINS CONFIDENTIAL AND PROPRIETARY INFORMATION THAT CANNOT BE REPRODUCED OR DIVULGED, IN WHOLE OR IN PART, WITHOUT WRITTEN AUTHORIZATION FROM THE MANUFACTURER.

THIRD ANGLE PROJECTION

HOLLISTER-WHITNEY
ELEVATOR CO. LLC

TITLE: ALIGNMENT MECHANISM, MAYR #6 BRAKE

DRAWN BY	SCALE	MATERIAL	REFERENCE TOL.
LTL	1:2	MAYR #8230739, SEE PARTS LIST	ALL DIMENSIONS REFERENCE UNLESS OTHERWISE SPECIFIED

SHEET SIZE	DATE	
B	11/26/2019	146-030 SHEET 1 OF 2

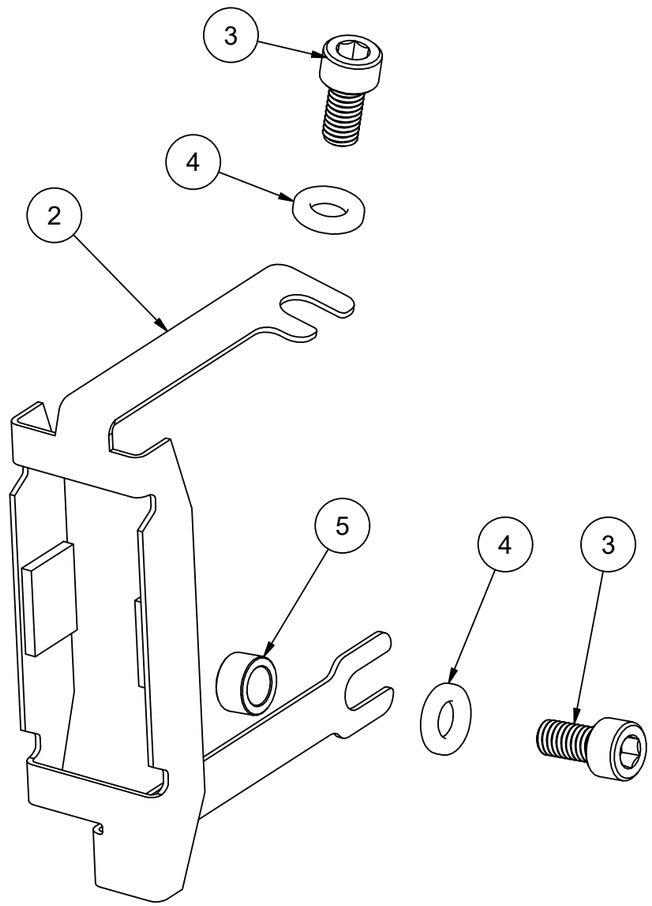

EXPLODED VIEW
RIGHT HAND ASSEMBLY
SCALE 1:1

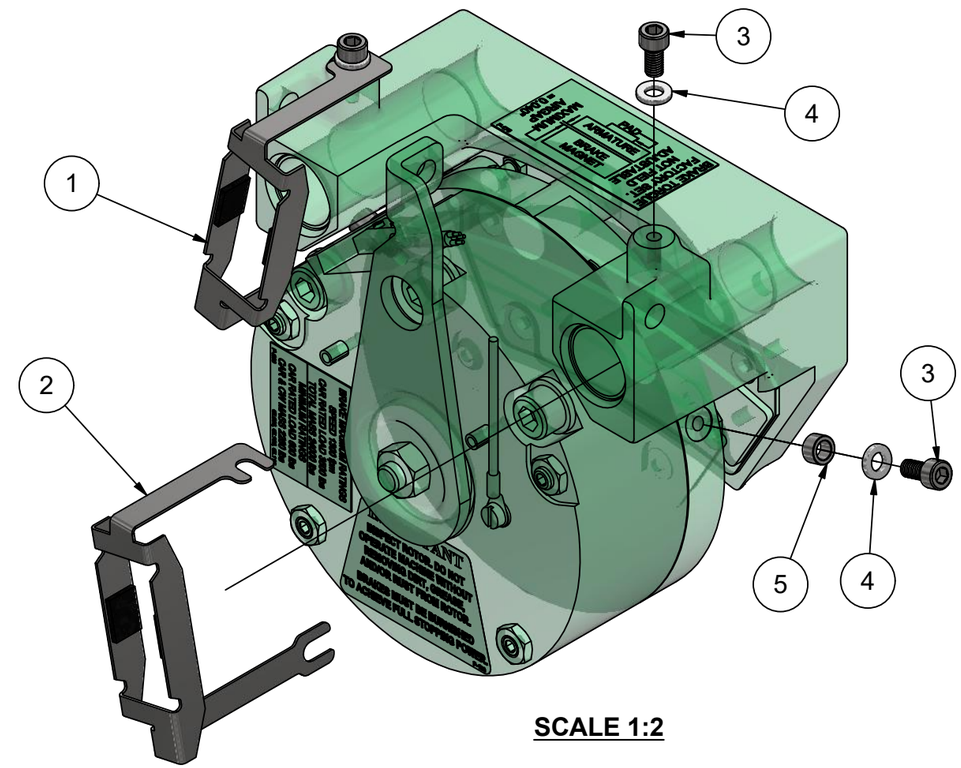

SCALE 1:2

WEIGHT: 0.227 lbmass

				SEE PAGE 1OF 2 FOR REVISIONS	

THIS DRAWING IS SUPPLIED AS A REPRESENTATION OF THE EQUIPMENT HOLLISTER-WHITNEY ELEVATOR CO. LLC ("MANUFACTURER") HAS AGREED TO SUPPLY. SLIGHT ADJUSTMENTS MAY OCCUR DURING MANUFACTURING AND INSTALLATION. ANY MODIFICATIONS NOT APPROVED IN WRITING BY MANUFACTURER MAY AFFECT OPERATION, VOIDS ANY WARRANTY AND RELEASES MANUFACTURER OF ALL LIABILITY.
THIS DOCUMENT CONTAINS CONFIDENTIAL AND PROPRIETARY INFORMATION THAT CANNOT BE REPRODUCED OR DIVULGED, IN WHOLE OR IN PART, WITHOUT WRITTEN AUTHORIZATION FROM THE MANUFACTURER.

THIRD ANGLE PROJECTION

HOLLISTER-WHITNEY
ELEVATOR CO. LLC

TITLE
ALIGNMENT MECHANISM, MAYR #6 BRAKE

DRAWN BY	SCALE	MATERIAL	REFERENCE TOL.
LTL	1:1	MAYR #8230739, SEE PARTS LIST	ALL DIMENSIONS REFERENCE UNLESS OTHERWISE SPECIFIED

SHEET SIZE	DATE	
B	11/26/2019	146-030 SHEET 2 OF 2

PARTS LIST			
ITEM	QTY	PART NUMBER	DESCRIPTION
1	2	144-030-01	ALIGNMENT BRACKET
5	2	144-030-05	M6 - 1 x 8mm SHCS
4	2	147-030-05	M6 - 1 x 16mm SHCS
3	4	147-030-06	M6 STANDARD WASHER
2	2	146-030-07	BUSHING

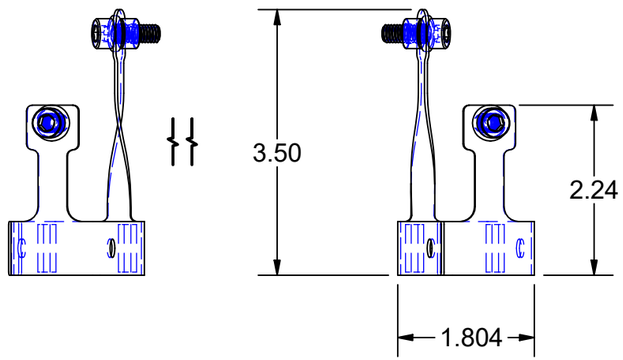

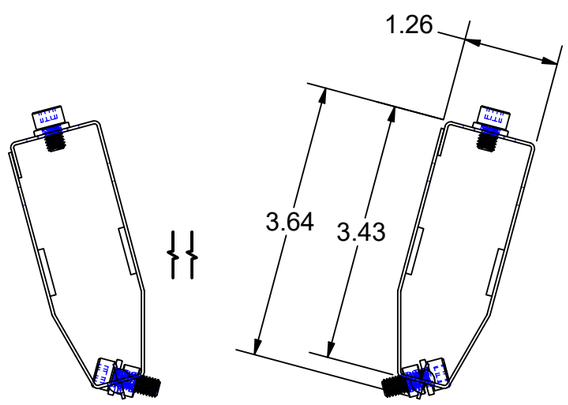

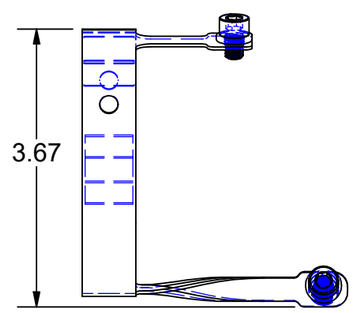

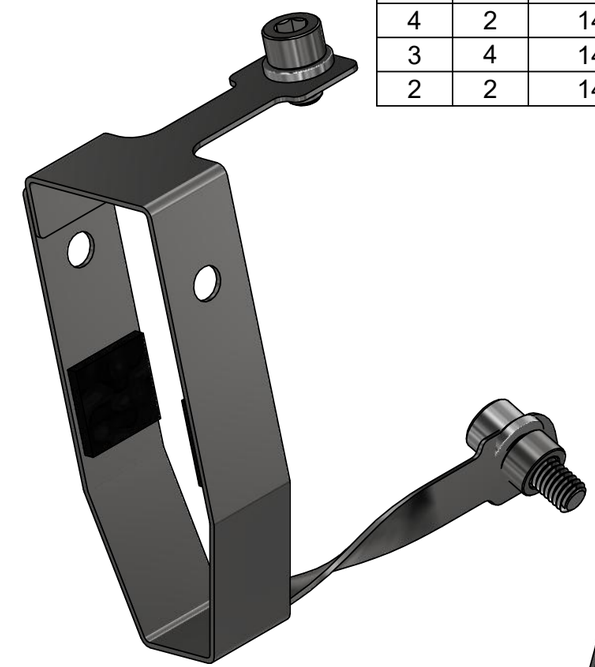

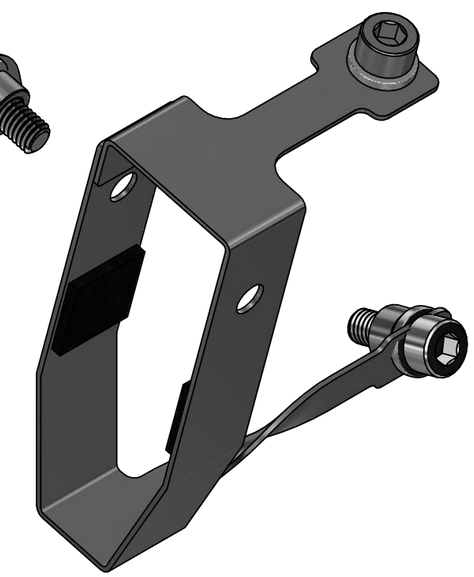

SCALE 1:1

WEIGHT: 0.275 lbmass

NOTES:

1. **USE WITH MAYR #8 (RSD8) BRAKE, ARTICLE # (PART #) 8275066 AND LATER**
2. **SEE PAGE 2 OF 2 FOR PARTS IDENTIFICATION BREAKDOWN AND EXPLODED VIEWS**
3. **PARTS LIST FOR ASSEMBLY-TO-BRAKE REFERENCE ONLY. PARTS ONLY AVAILABLE AS AN ASSEMBLY.**

			A	PRODUCTION RELEASE, PUR #1099	LTL 12/6/19

THIS DRAWING IS SUPPLIED AS A REPRESENTATION OF THE EQUIPMENT HOLLISTER-WHITNEY ELEVATOR CO. LLC ("MANUFACTURER") HAS AGREED TO SUPPLY. SLIGHT ADJUSTMENTS MAY OCCUR DURING MANUFACTURING AND INSTALLATION. ANY MODIFICATIONS NOT APPROVED IN WRITING BY MANUFACTURER MAY AFFECT OPERATION, VOIDS ANY WARRANTY AND RELEASES MANUFACTURER OF ALL LIABILITY.
THIS DOCUMENT CONTAINS CONFIDENTIAL AND PROPRIETARY INFORMATION THAT CANNOT BE REPRODUCED OR DIVULGED, IN WHOLE OR IN PART, WITHOUT WRITTEN AUTHORIZATION FROM THE MANUFACTURER.

THIRD ANGLE PROJECTION

HOLLISTER-WHITNEY
ELEVATOR CO. LLC

TITLE
ALIGNMENT MECHANISM, MAYR #8 BRAKE

DRAWN BY	SCALE	MATERIAL	REFERENCE TOL.
LTL	1:2	MAYR #8275264, SEE PARTS LIST	ALL DIMENSIONS REFERENCE UNLESS OTHERWISE SPECIFIED
SHEET SIZE B	DATE 12/3/2019		144-030 SHEET 1 OF 2

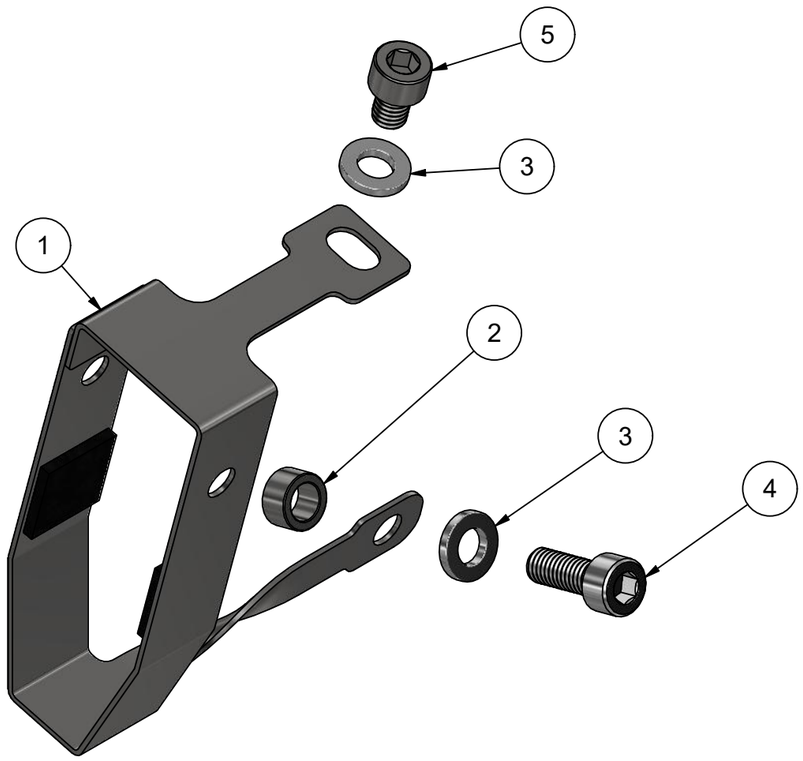

EXPLODED VIEW
SCALE 1:1

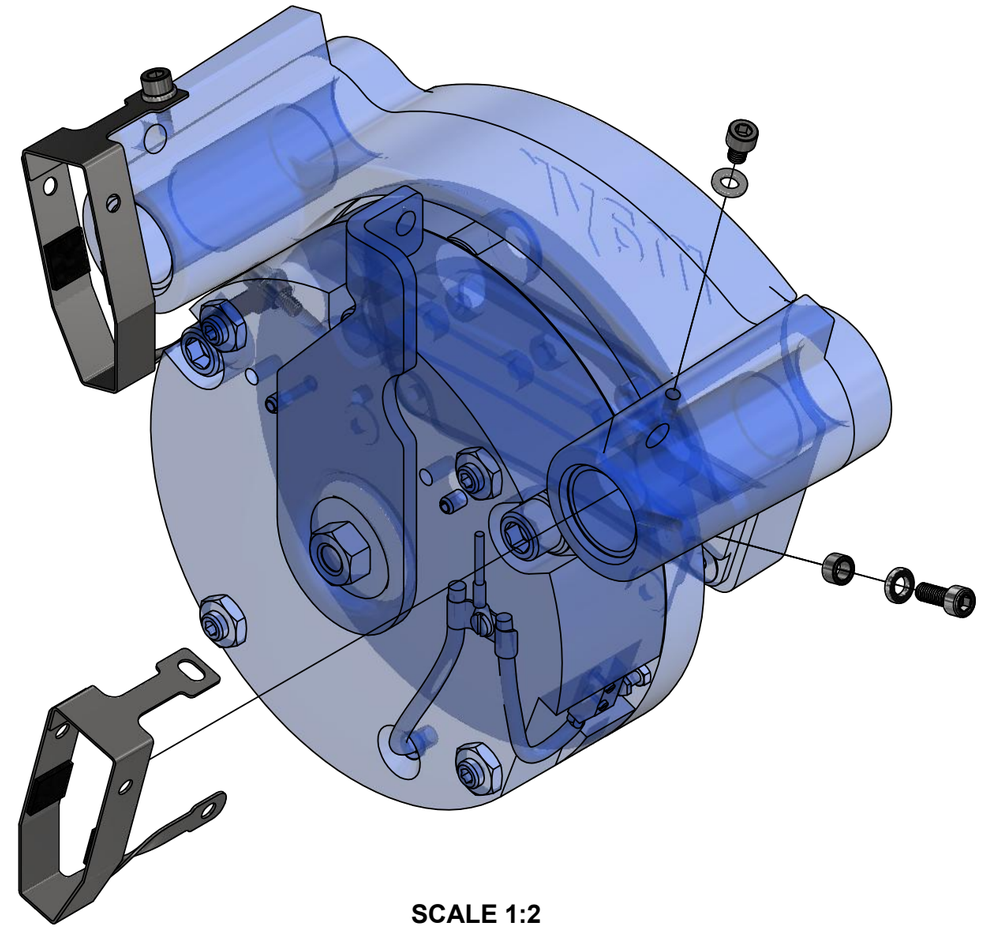

SCALE 1:2

WEIGHT: 0.275 lbmass

				SEE PAGE 1OF 2 FOR REVISIONS	

THIS DRAWING IS SUPPLIED AS A REPRESENTATION OF THE EQUIPMENT HOLLISTER-WHITNEY ELEVATOR CO. LLC ("MANUFACTURER") HAS AGREED TO SUPPLY. SLIGHT ADJUSTMENTS MAY OCCUR DURING MANUFACTURING AND INSTALLATION. ANY MODIFICATIONS NOT APPROVED IN WRITING BY MANUFACTURER MAY AFFECT OPERATION, VOIDS ANY WARRANTY AND RELEASES MANUFACTURER OF ALL LIABILITY.
THIS DOCUMENT CONTAINS CONFIDENTIAL AND PROPRIETARY INFORMATION THAT CANNOT BE REPRODUCED OR DIVULGED, IN WHOLE OR IN PART, WITHOUT WRITTEN AUTHORIZATION FROM THE MANUFACTURER.

THIRD ANGLE PROJECTION

HOLLISTER-WHITNEY
ELEVATOR CO. LLC

TITLE
ALIGNMENT MECHANISM, MAYR #8 BRAKE

DRAWN BY	SCALE	MATERIAL	REFERENCE TOL.
LTL	1:1	MAYR #8275264, SEE PARTS LIST	ALL DIMENSIONS REFERENCE UNLESS OTHERWISE SPECIFIED
SHEET SIZE B	DATE 12/3/2019		144-030 SHEET 2 OF 2

PARTS LIST			
ITEM	QTY	PART NUMBER	DESCRIPTION
1	1	147-030-01A	ALIGNMENT LEVER, LEFT
2	1	147-030-01B	ALIGNMENT LEVER, RIGHT
3	2	147-030-02	ALIGNMENT THRUST PIECE
4	2	147-030-03	KNURLED HEAD SCREW, M6 -1 x 20mm
5	4	147-030-04	M6 HEX NUT
6	8	147-030-05	M6 - 1 x 16mm SHCS
7	8	147-030-06	M6 STANDARD WASHER
8	4	147-030-07	BUSHING

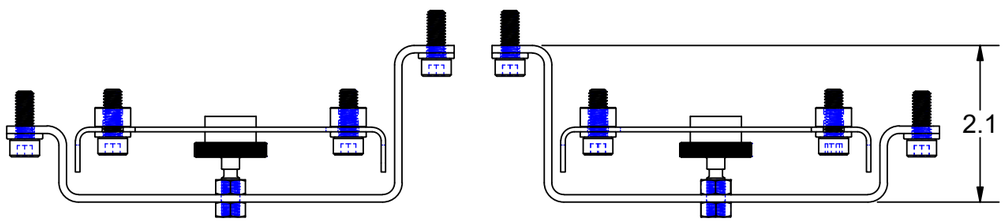

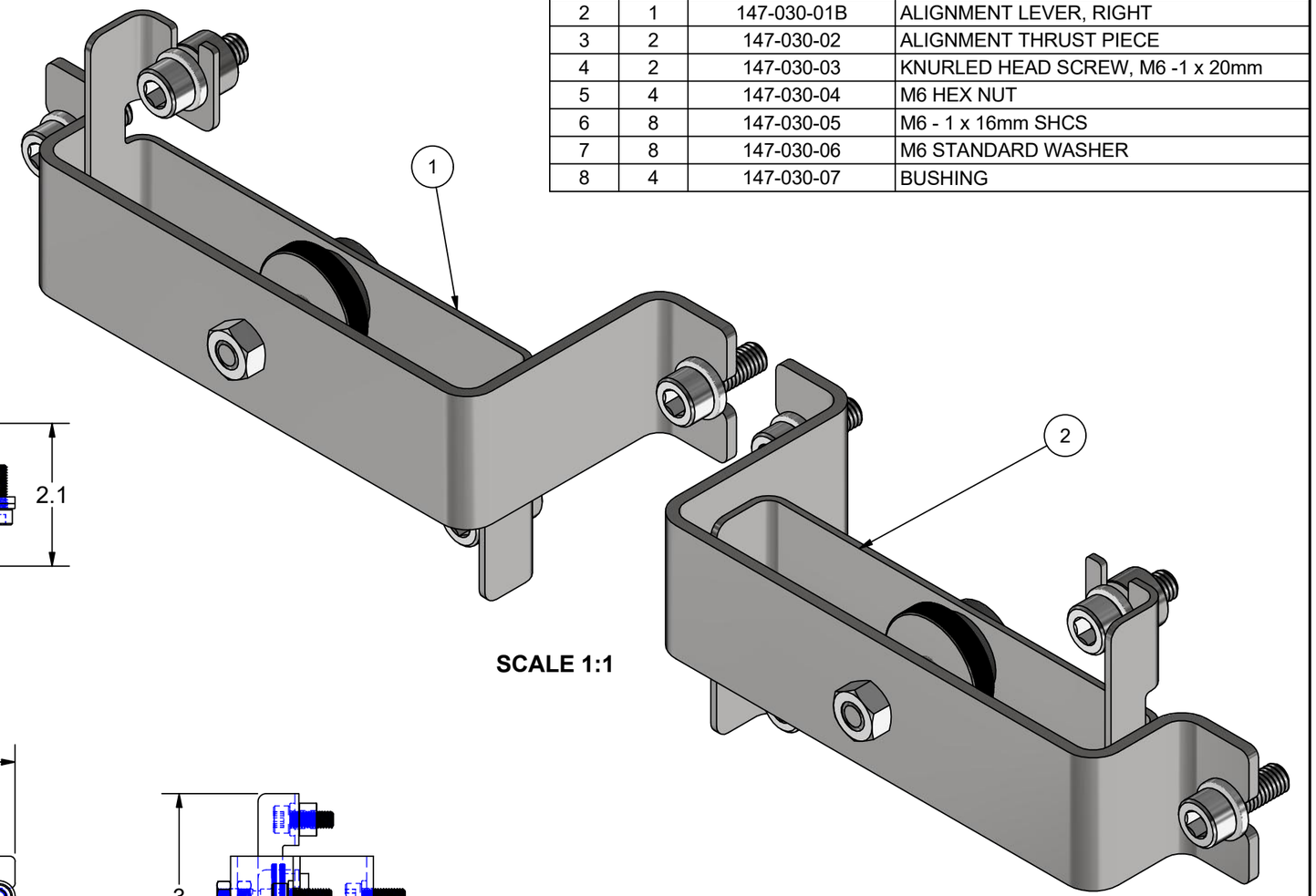

SCALE 1:1

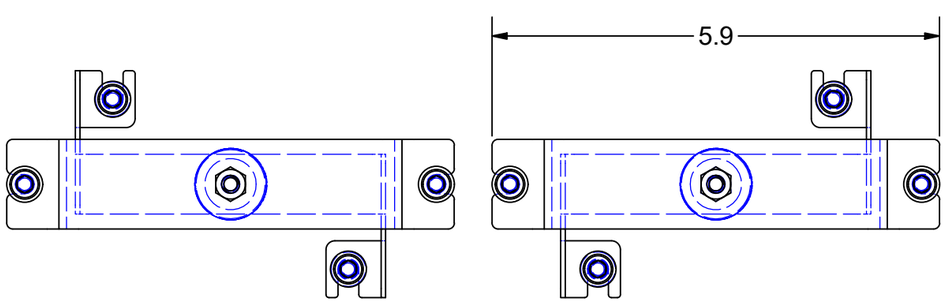

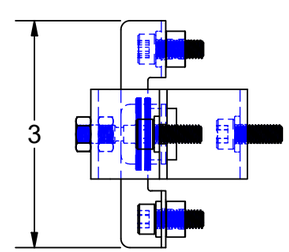

WEIGHT: 1.071 lbmass

NOTES:

1. **USE WITH MAYR #10 BRAKE, ARTICLE # (PART #) 8252206 AND LATER**
2. **SEE PAGE 2 OF 2 FOR PARTS IDENTIFICATION BREAKDOWN AND EXPLODED VIEWS**
3. **PARTS LIST FOR ASSEMBLY-TO-BRAKE REFERENCE ONLY. PARTS ONLY AVAILABLE AS AN ASSEMBLY.**

			A	PRODUCTION RELEASE, PUR #1099	LTL 12/6/19

THIS DRAWING IS SUPPLIED AS A REPRESENTATION OF THE EQUIPMENT HOLLISTER-WHITNEY ELEVATOR CO. LLC ("MANUFACTURER") HAS AGREED TO SUPPLY. SLIGHT ADJUSTMENTS MAY OCCUR DURING MANUFACTURING AND INSTALLATION. ANY MODIFICATIONS NOT APPROVED IN WRITING BY MANUFACTURER MAY AFFECT OPERATION, VOIDS ANY WARRANTY AND RELEASES MANUFACTURER OF ALL LIABILITY.
THIS DOCUMENT CONTAINS CONFIDENTIAL AND PROPRIETARY INFORMATION THAT CANNOT BE REPRODUCED OR DIVULGED, IN WHOLE OR IN PART, WITHOUT WRITTEN AUTHORIZATION FROM THE MANUFACTURER.

THIRD ANGLE PROJECTION

HOLLISTER-WHITNEY
ELEVATOR CO. LLC

TITLE
ALIGNMENT MECHANISM, MAYR #10 BRAKE

DRAWN BY	SCALE	MATERIAL	REFERENCE TOL.
LTL	1:2	MAYR #8251969, SEE PARTS LIST	ALL DIMENSIONS REFERENCE UNLESS OTHERWISE SPECIFIED

SHEET SIZE	DATE	
B	4/22/2019	147-030 SHEET 1 OF 2

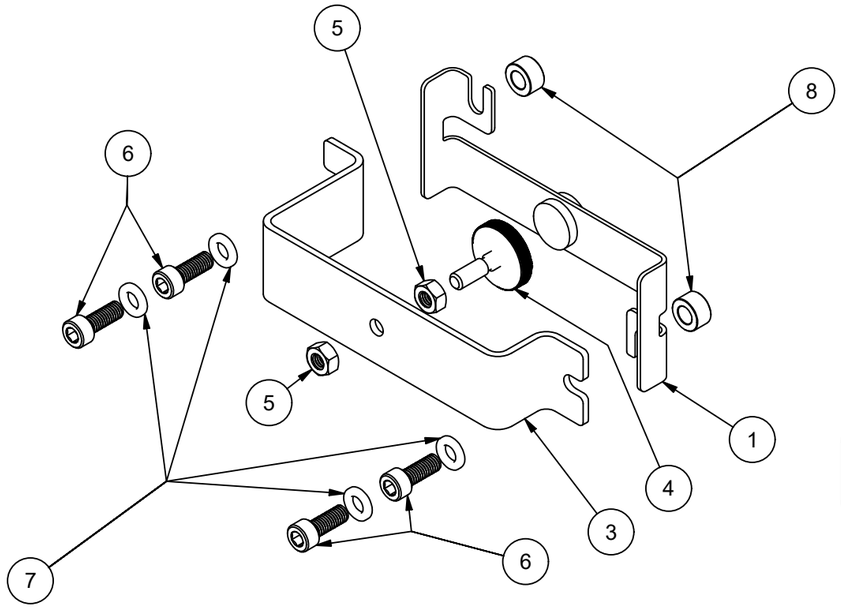

EXPLODED VIEW
LEFT HAND MECHANISM
SCALE 1:2

EXPLODED VIEW
RIGHT HAND MECHANISM
SCALE 1:2

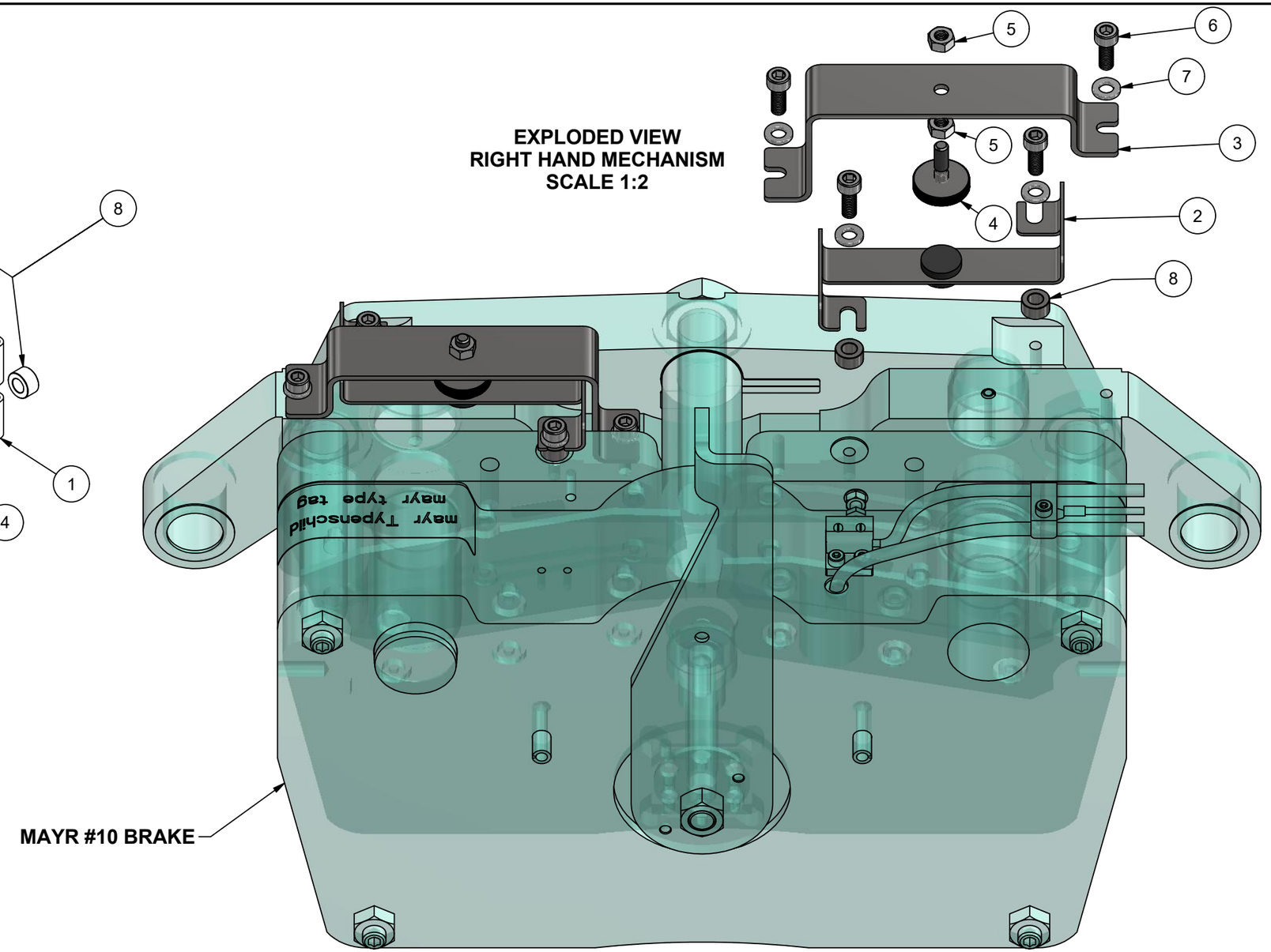

WEIGHT: 22.550 lbmass

				SEE PAGE 1OF 2 FOR REVISIONS	

THIS DRAWING IS SUPPLIED AS A REPRESENTATION OF THE EQUIPMENT HOLLISTER-WHITNEY ELEVATOR CO. LLC ("MANUFACTURER") HAS AGREED TO SUPPLY. SLIGHT ADJUSTMENTS MAY OCCUR DURING MANUFACTURING AND INSTALLATION. ANY MODIFICATIONS NOT APPROVED IN WRITING BY MANUFACTURER MAY AFFECT OPERATION, VOIDS ANY WARRANTY AND RELEASES MANUFACTURER OF ALL LIABILITY.
THIS DOCUMENT CONTAINS CONFIDENTIAL AND PROPRIETARY INFORMATION THAT CANNOT BE REPRODUCED OR DIVULGED, IN WHOLE OR IN PART, WITHOUT WRITTEN AUTHORIZATION FROM THE MANUFACTURER.

THIRD ANGLE PROJECTION

HOLLISTER-WHITNEY
ELEVATOR CO. LLC

TITLE
ALIGNMENT MECHANISM, MAYR #10 BRAKE

DRAWN BY	SCALE	MATERIAL	REFERENCE TOL.
LTL	1:2	MAYR #8251969, SEE PARTS LIST	ALL DIMENSIONS REFERENCE UNLESS OTHERWISE SPECIFIED

SHEET SIZE	DATE	
B	4/22/2019	147-030 SHEET 2 OF 2

Notes and Observations	Date	Initials