GLT-25S2 Gearless Machine Instruction Manual (#1192)

© Hollister-Whitney Elevator Co. LLC

#1Hollister-Whitney Parkway

Quincy, IL 62305

Phone 217.222.0466 • Fax 217.222.0493

4/1/2022

WARNING

This installation and service manual is intended for the use of qualified and authorized elevator personnel ONLY. For your safety and the safety of others, do not attempt ANY procedure that you are not qualified and authorized to perform. Recommended procedures must be done in accordance with the applicable rules of the latest edition of the National Electrical Code; the latest edition of ASME A17.1; and all governing local codes. Every attempt has been made to ensure that this guide is accurate and up to date. Hollister-Whitney Elevator Co. LLC assumes no liability for consequences resulting from any error or omission. Please notify Hollister-Whitney Elevator Co. LLC regarding any difficulties with this guide.

Contents

1 Introduction 1-1
1.1 Description 1-1
1.2 Warranty Information 1-1
2 Safety Precautions 2-1
2.1 Terms in This Manual 2-1
2.2 General Safety 2-1
2.3 Electrical Safety 2-1
2.4 Electrical Hazards 2-2
2.5 Mainline Disconnect 2-2
2.6 Test Equipment Safety 2-2
2.7 When Power Is On 2-2
2.8 Product Specific Warnings 2-2
3 Arrival of the Equipment 3-1
3.1 Receiving 3-1
3.2 Data Tag 3-1
3.3 Handling 3-1
3.4 Hoisting 3-2
3.5 Storage 3-2
3.6 Moisture, Condensation 3-3
4 Application 4-1
4.1 Overview 4-1
4.2 Codes and Standards 4-2
4.3 Environmental Specifications 4-2
4.4 Machine Specifications 4-2
4.5 Brake Specifications 4-4
5 Installation 5-1
5.1 Machine Mounting 5-1
5.2 Electrical Connection 5-2

5.3 Brake Adjustment/Centering 5-4
5.4 Encoder Connection 5-7
5.5 Startup 5-7
5.6 Manual Brake Release 5-8
6 Maintenance 6-1
6.1 General 6-1
6.2 Cleaning 6-1
6.3 Bearings 6-2
6.4 Brake Wear 6-2
6.5 Other Items 6-3
7 Replacement 7-1
7.1 Encoder Replacement 7-1
7.2 Brake Replacement 7-7
8 Drawings and Support Documents 8-1
8.1 Outline and Item Drawing 8-1
9 Notes 9-1

Section

1

1 Introduction

1.1 Description

Thank you for choosing the Hollister Whitney Elevator Company (HWEC) GLT-25S2 Gearless Machine!

The GLT-25S2 machine has been designed for use in 2:1 roped, machine room and machine-room-less (MRL) applications with VVVF controls. The machine is designed with 30 poles to provide smooth, quiet, and long-lasting operation.

HWEC machines are designed to perform in a tolerant machine space. The machine space working temperature should be held between 35° F & 104° F, (1.7° C & 40° C) and humidity should be held to an average of 90% non-condensing.

1.2 Warranty Information

All parts and equipment manufactured by HWEC are guaranteed against defects in material and workmanship for a period of one (1) year from the date of shipment.

Warranty covers only the repair or replacement of parts, F.O.B. our factory, upon determination by inspection at our factory that warranty is applicable.

Equipment and components not of our manufacture are warranted only to the extent of the original manufacturer's warranty.

Our warranty specifically does not include any other incidental liability or expense such as transportation, labor, and unauthorized repairs.

Section

2

2 Safety Precautions

Read this section before any work is performed on elevator equipment.

✱ IMPORTANT –

The procedures contained in this manual are intended for the use of qualified elevator personnel. In the interest of your personal safety and the safety of others, do NOT attempt ANY procedure that you are NOT qualified to perform.

All procedures must be done in accordance with the applicable rules in the latest edition of the National Electrical Code; the latest edition of ASME A17.1; and any governing local codes.

2.1 Terms in This Manual

CAUTION:

Caution statements identify conditions that could result in damage to the equipment or other property if improper procedures are followed!

WARNING:

Warning statements identify conditions that could result in personal injury if improper procedures are followed!

2.2 General Safety

Specific warnings and cautions are found where they apply, and DO NOT appear in this summary.

2.3 Electrical Safety

All wiring must be in accordance with the National Electrical Code and must be consistent with all state and local codes.

2.4 Electrical Hazards

Electric shocks can cause personal injury or loss of life. Circuit breakers, switches and fuses may NOT disconnect all power to the equipment. Always refer to the wiring diagrams. Whether the A/C supply is grounded or not, high voltage will be present at many points.

2.5 Mainline Disconnect

Unless otherwise suggested, always turn OFF. Lock and tag out the mainline disconnect to remove power from the equipment.

2.6 Test Equipment Safety

Always refer to manufactures' instruction book for proper test equipment operation and adjustments.

Megger testing, or buzzer type continuity testers, can damage electronic components. Connection of devices such as voltmeters on certain low-level analog circuits may degrade electronic system performance. Always use a voltmeter with a minimum impedance of 1M Ohm/Volt. A digital voltmeter is recommended.

2.7 When Power Is On

Dangerous voltages exist at several points in some products. To avoid personal injury, do NOT touch exposed electrical connections or components while power is On.

2.8 Product Specific Warnings

WARNING

GLT-25S2 machine MUST be balanced during hoisting. See paragraph 3.4 for proper lifting configurations.

WARNING

Hang the elevator car before removing ANY bolts. Failure to do so may result in severe injury and equipment damage.

Section

3

3 Arrival of the Equipment

3.1 Receiving

Immediately upon arrival of the machine, make a visual check for any external damage. If any damage incurred in transit is found, make notice of the claim in the presence of the carrier, and notify HWEC. If necessary, do not put these machines into operation without first consulting HWEC.

If the machine has gotten wet during transportation, make notice of the claim in the presence of the carrier and notify HWEC. See also Section 3.6.

3.2 Data Tag

Check the machine data tag to ensure the machine conforms to your order.

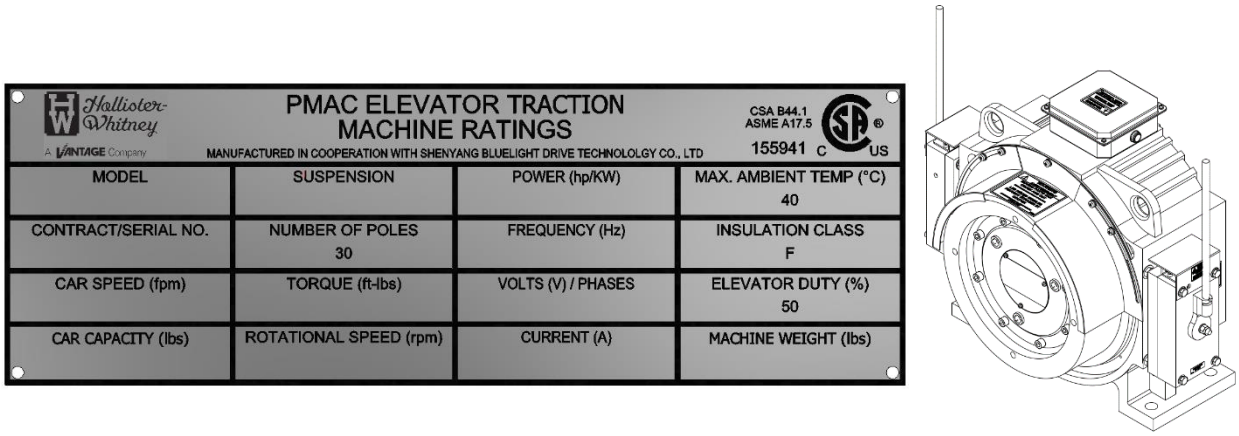

Figure 1

3.3 Handling

The machine will be delivered on a wooden pallet. It can be left on the pallet and moved with a standard fork truck or pallet jack.

3.4 Hoisting

The machine weighs about 850 pounds (385 kg). When removing the machine from the pallet, it must be lifted using the lifting holes provided at the top of the machine.

When lifting the machine, use a spreader beam or other suitable rigging device to pull straight up on the lifting holes.

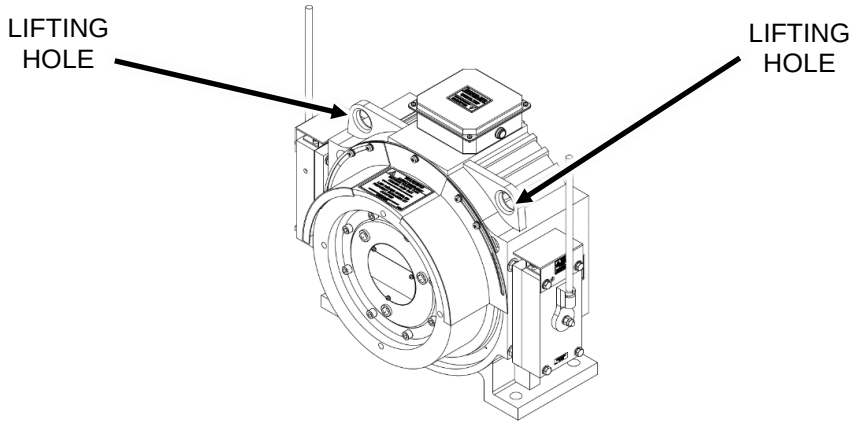

Figure 2

WARNING

Use only the lifting holes when lifting the machine! Do not use any other machine component to lift the machine! Lifting the machine by any other component will result in damage to the machine or possible failure of the component resulting in the machine falling from the hoisting system!

Follow all the necessary precautions to avoid damage to the machine or risk to personnel when moving or hoisting the machine.

3.5 Storage

During storage in a warehouse or on the elevator job site, precautions must be taken to protect the machine from dust, dirt, moisture, metal shavings and temperature extremes.

For short term storage, place the machine in a warm, dry and clean environment.

Protect the machine from harsh weather conditions and temperature variations that can lead to condensation.

Protect from dust and metal shavings. Metal dust and shavings can be attracted into the machine by the magnets.

For longer term storage, follow the recommendations above plus; place the machine in a sealed, waterproof enclosure. Add a dehydrating packet that is sized for the enclosure's volume and humidity level.

3.6 Moisture, Condensation

Before installing the machine, and before any voltage is applied, check the machine for condensation, or any evidence of moisture or water. If any evidence of wetness is found, contact HWEC for drying instructions.

After the machine has been dried per factory instructions, it will be necessary to verify the insulation between each coil phase and earth ground. Using an insulation tester (or megohmmeter) check the insulation resistance at 500VDC.The resistance should be NO LESS than100 Mohm.

Section

4

4 Application

4.1 Overview

The GLT-25S2 machine is synchronous permanent magnet gearless machine designed for elevators. The machine has 30 poles to provide smooth, quiet, and long-lasting operation. Its configuration allows elevator capacity up to 2500 lbs. with 2:1 roping, single wrap arrangement at 50% counterbalance with up to a 9000 lb. shaft load. See Section 4.4 for complete specifications. The overall system load is calculated by adding the following items:

Empty Car Weight + Counterbalance Weight + Capacity + Hoist Rope Weight + Compensation Weight + Traveling Cable Weight

The GLT-25S2 machine brake system is equipped with two block brakes.

The latest HWEC manuals, bulletins and procedures are available for download from the HWEC website.

The following is a list of major components of the GLT-25S2 machines. Along with a description of their functions, there is an overview of some of the critical adjustments and maintenance information. See Installation and Maintenance for detail.

1. **PM Motor Housing** - The housing contains the PM windings used to provide the necessary torque and speed to move the elevator in operation.
2. **Traction Sheave** – A grooved sheave is connected directly to the machine rotor. The grooves provide traction between the sheave and the hoist ropes.
3. **Brake** – The electromechanical device is used to prevent the elevator from moving when the car is at rest.
4. **Sheave Guard/Rope Retainer** – Provides rope retention and keeps hoist ropes away from contact after rope installation.
5. **Machine Rotor & Brake Wheel** – The brake wheel is connected to the main shaft. When the brake is energized, the brake is released from the brake wheel.
6. **Nameplate** - Displays the machine rated data and manual factory contact/serial number information.
7. **Encoder** – (Behind Cover) This device is directly coupled to the rotor of the machine. It is provided to give the absolute speed feedback of the hoist motor to the inverter drive system and to the elevator controller.

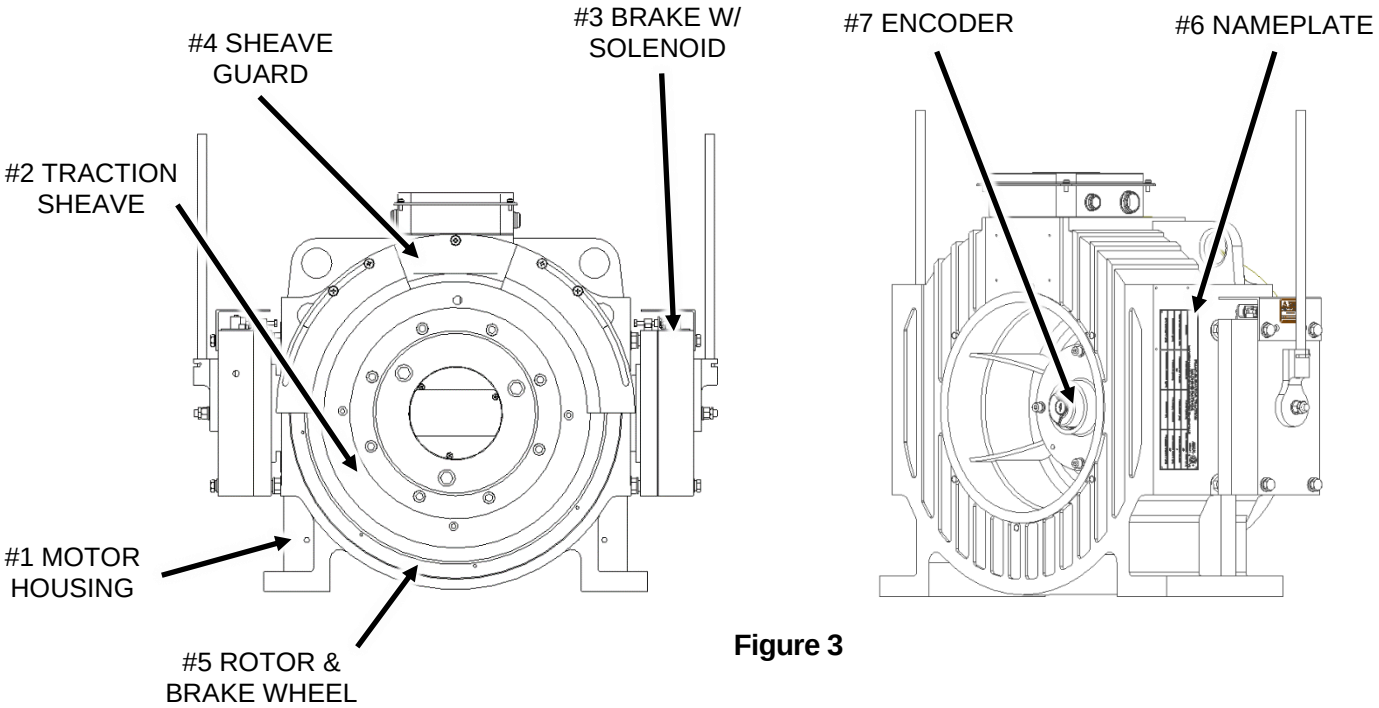

Figure 3

4.2 Codes and Standards

These machines are designed to comply with ASME A17.1/CSA B44 code. The motors are designed with insulation class F minimum and have been approved by and carry a CSA approved label.

4.3 Environmental Specifications

- Operating ambient temperature: 35° F to 104° F (1.7 C to 40 C)
- Humidity average of 90% non-condensing

4.4 Machine Specifications

- Traction Sheave (removeable) Diameter: 15.75 in
- Main and emergency block brakes. Each capable of holding 125% of the load
- Brake switches, wired normally close standard
- Heidenhain ECN1313 2048 encoder and 1.5-meter-long cable (standard)
- Sheave guard/rope retainer
- Machine dimensions and parts list can be found at the end of this book

380V. 2:1, 15.75" SHEAVE, SINGLE WRAP															
HOLLISTER-WHITNEY PART #	HOLLISTER-WHITNEY ORDER #	SPEED (fpm)	CAPACITY (lbs)	MOTOR RATING (HP)	MOTOR RATING (kW)	POLES	RATED (rpm)	RATED VOLTAGE	ACTUAL VOLTAGE	RATED FREQ (Hz)	RATED CURRENT (A)	PEAK CURRENT (A)	RATED TORQUE (ft-lbs)	MAX ACCEL TORQUE (ft-lbs)	CWT (%)
GLT-25S2-A-T401	GLT-25S2-C-T401	100	1760	3.7	2.8	30	48.5	380	159	12.2	11.8	28.3	406	812	50
		150		5.6	4.2		72.7		238	18.3					
		200		7.5	5.6		96.9		317	24.3					
GLT-25S2-A-T402	GLT-25S2-C-T401	250	1760	9.4	7.0	30	121.2	380	220	30.0	20.1	48.2	406	812	50
		300		11.2	8.4		145.4		264	36.0					
		350		13.1	9.8		169.7		308	42.5					
GLT-25S2-A-T403	GLT-25S2-C-T401	400	1760	15.0	11.2	30	193.9	380	234	48.6	30.2	72.5	406	812	50
		450		16.9	12.6		218.1		263	54.7					
		500		18.7	14.0		242.4		292	60.7					
GLT-25S2-B-T401	GLT-25S2-C-T402	100	2200	4.5	3.4	30	48.5	380	163	12.2	14.3	34.3	491	982	50
		150		6.8	5.1		72.7		244	18.3					
		200		9.1	6.8		96.9		325	24.3					
GLT-25S2-B-T402	GLT-25S2-C-T402	250	2200	11.3	8.4	30	121.2	380	224	30.0	24.2	58.1	491	982	50
		300		13.6	10.1		145.4		269	36.0					
		350		15.9	11.8		169.7		314	42.5					
GLT-25S2-B-T403	GLT-25S2-C-T402	400	2200	18.1	13.5	30	193.9	380	237	48.6	36.5	87.6	491	982	50
		450		20.4	15.2		218.1		266	54.7					
		500		22.7	16.9		242.4		296	60.7					
GLT-25S2-C-T401	GLT-25S2-C-T403	100	2500	5.2	3.9	30	48.5	380	170	12.2	16.4	39.4	565	1130	50
		150		7.8	5.8		72.7		255	18.3					
		200		10.4	7.8		96.9		340	24.3					
GLT-25S2-C-T402	GLT-25S2-C-T403	250	2500	13.0	9.7	30	121.2	380	228	30.0	27.9	67.0	565	1130	50
		300		15.6	11.7		145.4		273	36.0					
		350		18.3	13.6		169.7		319	42.5					
GLT-25S2-C-T403	GLT-25S2-C-T403	400	2500	20.9	15.6	30	193.9	380	242	48.6	42.0	100.8	565	1130	50
		450		23.5	17.5		218.1		273	54.7					
		500		26.1	19.4		242.4		303	60.7					

Table 1 – Maximum Detailed Specifications

4.5 Brake Specifications

- Two brakes are supplied standard from the factory. One brake is meant to serve as a primary machine brake and the other as a secondary emergency brake. Please contact Hollister-Whitney for details regarding using a Rope Gripper® as the emergency brake with a GLT-25S2 machine.
- Brake switch rating DC 110 V Rated current 1.57 A.
- The opening voltage of the brake is not more than 110 V, the releasing voltage is not more than 70 V, and the control range is 15 V-30 V.

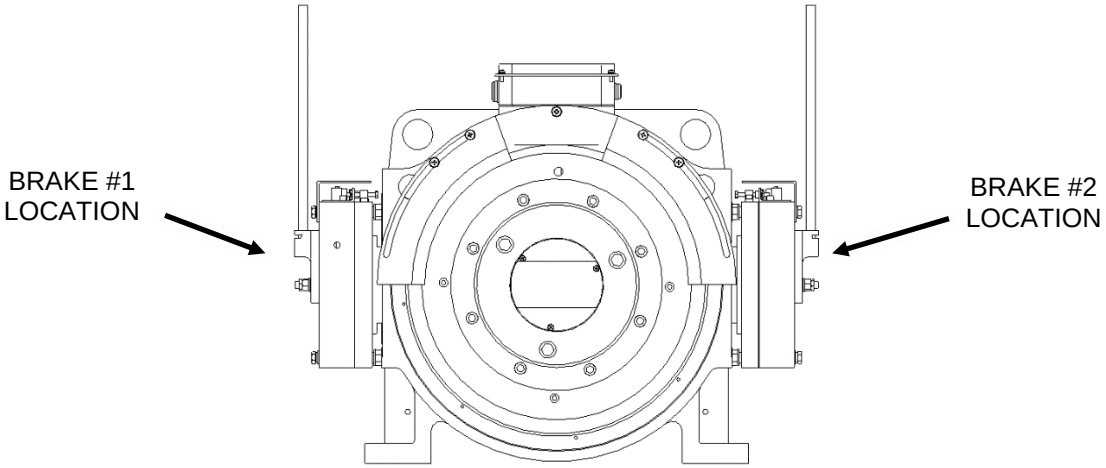

Figure 4

Section

5

5 Installation

5.1 Machine Mounting

Before hoisting the machine into place, verify all the hoisting equipment is rated for the 850 pounds (385 kg) weight of the machine. See Section 3.4.

Provide a level, structurally supported (rated for the load on the machine) machine space with proper clearance around the machine for maintenance and adjustments.

This machine is primarily intended to be mounted in traditional overhead applications with down-pull forces on the traction sheave.

5.1.1 Traditional Overhead Mounting

Anchor the machine to the structural support surface using the (4) mounting hole locations in the base. The hardware required to anchor the machine to the support surface should be at least 7/8” diameter, grade #5 minimum, with standard washers. Hardware adhering to ASME A325 is also suitable.

Note - No mounting hardware is shipped with the machine due to the varying mounting surface thicknesses.

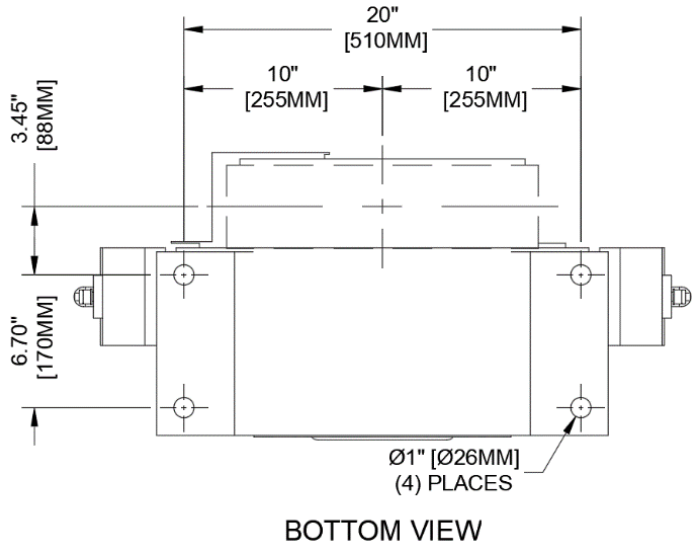

Figure 5

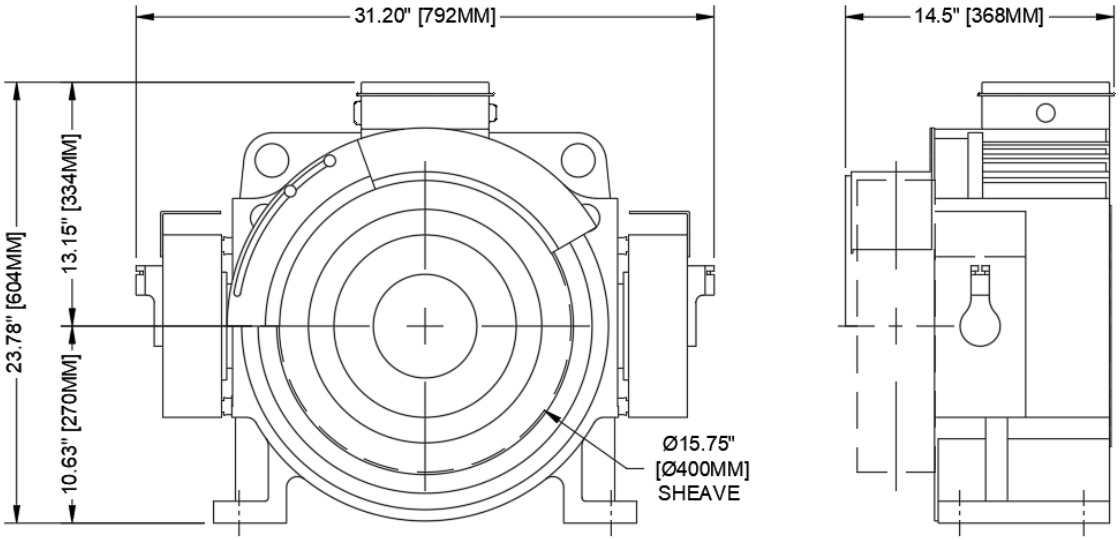

Figure 6

5.2 Electrical Connection

Use the project wiring diagrams (with the motor configuration information) to connect the motor to the controller.

WARNING

Before performing any electrical connections, make sure that power supply is turned off. Only then proceed with connecting electrical leads to power supply. Never work in machine electrical enclosure while power supply is on!

Direct connection to the three-phase power is forbidden, it may destroy the motor.

5.2.1 Machine Wiring

- The Thermal Protection Switch (TPS) is wired with leads labeled and supplied into the machine electrical enclosure. Refer to Figure 6.
- Consult your controller manufacturer for appropriate TPS connections.
- Verify the electrical supply from the elevator drive and brake power supplies match the machine data tag. Refer to Figure 1.

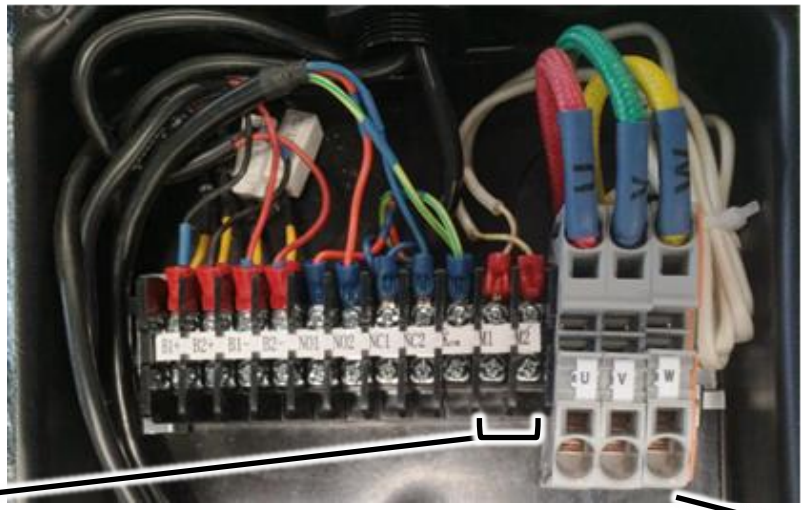

Figure 7

- Connect the U-V-W lines from the drive as shown.
- Earth Ground connects to the ground lug terminal inside the electrical enclosure.

Note - Check and tighten all leads (motor side and line side) on installation.

WARNING

The machine and emergency brake coils must be independent!

It is the responsibility of the user to connect the motor in accordance with the current legislation and regulations in the country of use. This is particularly important in regard to wire sizes used to connect the power and earth ground and the type and size of fuses.

5.2.2 Brake Wiring

- Connect the machine brake and emergency brake as shown.
- The brake switches are wired normally closed from HWEC.
- To change the switches to function as normally closed, remove the blue wire from the terminal block in the electrical enclosure, and replace it with the spare gray wire coming from the brake switch.

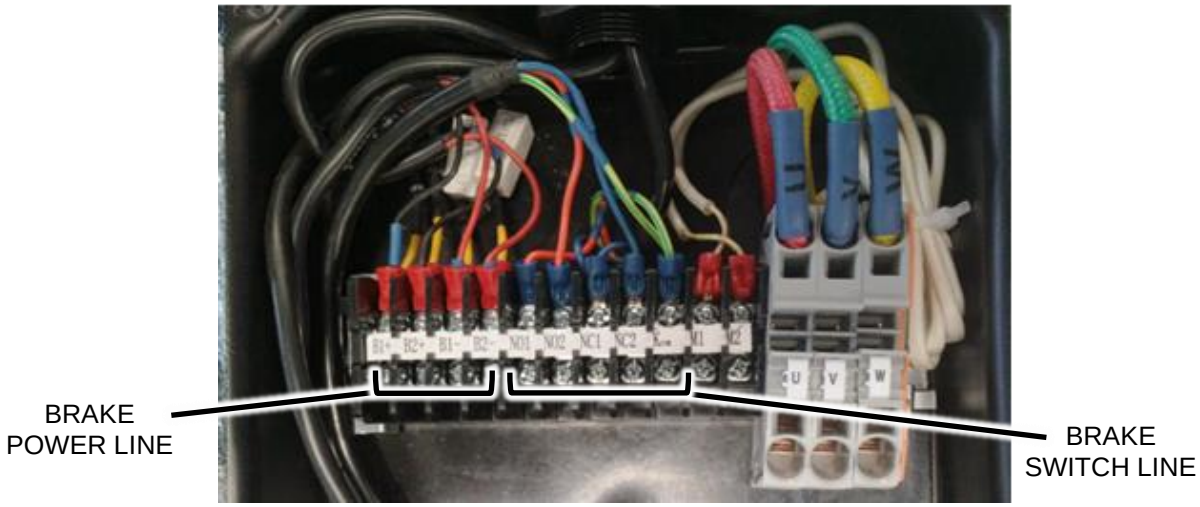

Figure 8

5.3 Brake Adjustment/Centering

Brakes must be adjusted after load is applied to the machine.

As brake pads wear, or new pads are installed, adjustment will be required.

5.3.1 Adjustment of the Stroke

The air gap of the brake is the space between the braking pad and braking wheel. The aim of adjustment of the air gap of brake, is to adjust the space between the braking pad and the braking wheel. Correct air gap is between 0.012” (0.30 mm) to 0.022” (0.55 mm).

When the air gap of brake is more than 0.022” (0.55 mm), please do as follows:

1. Loosen the 4 installing bolts clockwise with 16mm wrench until the guide screw can rotate. See Figure 9.

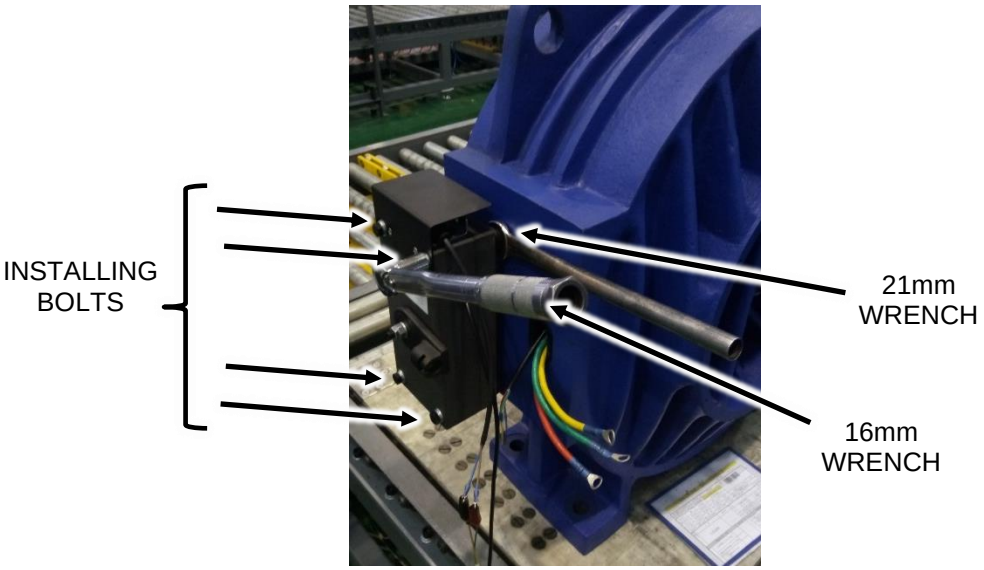

Figure 9

2. Rotate 4 guide screws counterclockwise with the 21mm wrench and test the air gap of brake while adjusting until the air gap of brake is between 0.012” (0.30 mm) to 0.022” (0.55 mm). See Figure 10.

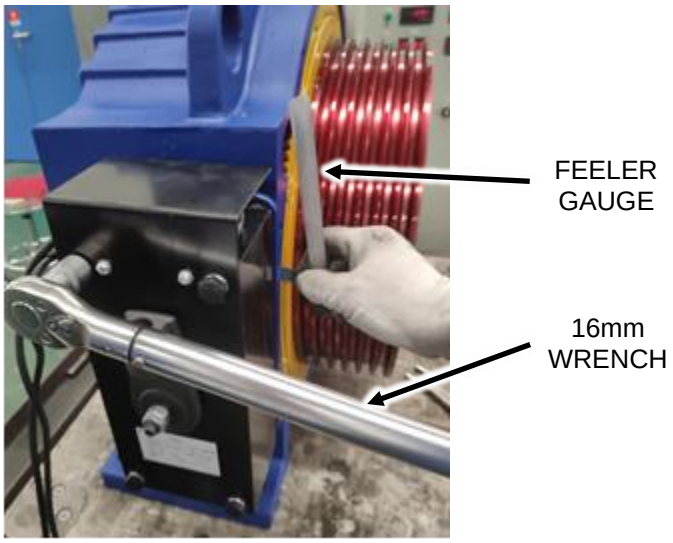

Figure 10

3. Rotate installing bolts clockwise, fix the brake and the machine base, making sure the gap is between 0.012” (0.30 mm) to 0.022” (0.55 mm).

4. Rotate 4 guide screws clockwise, making sure they seat firmly on the base installing surface. See Figure 11.

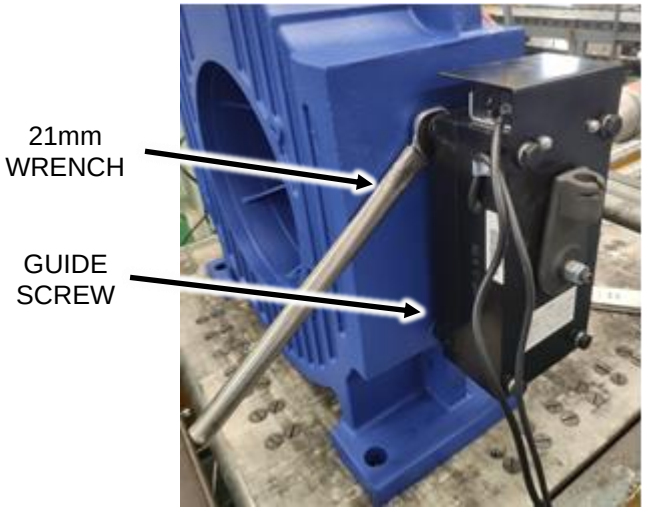

Figure 11

Check the air gap of the brake, it should be within 0.012” (0.30 mm) to 0.022” (0.55 mm).

<u>When the air gap of brake is less than 0.012” (0.30 mm) please do as follows:</u>

1. Rotate 4 installing bolts counterclockwise until the 0.012” (0.30 mm) to 0.022” (0.55 mm) feeler gauge can be put in.
2. Rotate 4 guide screws clockwise, making sure they seat firmly on the base installing surface. Figure 11
3. Tighten 4 installing bolts clockwise until the 0.012” (0.30 mm) to 0.022” (0.55 mm) feeler can be put out freely.

Check the air gap of the brake, it should be within 0.012” (0.30 mm) to 0.022” (0.55 mm).

5.4 Encoder Connection

The machines are supplied with Heidenhain ECN1313 2048 encoder. A 1.5-meter encoder cable is connected to the encoder and extends from the back of the machine.

Connect the supplied encoder cable to the encoder cable extending from the back of the machine.

When using a KEB drive, the encoder cable can be used "as-is."

When using any other manufacturer's drive, consult control manufacturer for cable compatibility and availability. DO NOT modify the KEB cable without first consulting the control manufacturer. Any modification of the KEB cable voids its warranty.

5.5 Startup

Verify all the motor related settings in the elevator controller match the information on the machine data tag. Refer to Figure 1.

Verify that all the brake parameters match the information on the machine data tag. Refer to Figure 1.

Follow the controller manufacturer's procedure for alignment of the magnets (motor learn).

Briefly run the machine to verify the machine functionality and brake operation.

Verify the drive sheave is plumb and aligned with the rope drop locations.

Install the hoist ropes, adjust the rope shackles, and check the ropes for equal tension. The rope tension must be uniform, or it may cause vibration and premature wear on the traction sheave and hoist ropes.

Re-verify the traction sheave is plumb once the machine is fully loaded.

5.6 Manual Brake Release

The brakes can be manually released in the event of loss of power.

NOTE: The manual releasing device should be operated by 2 professionals, and make sure the power is shut down first.

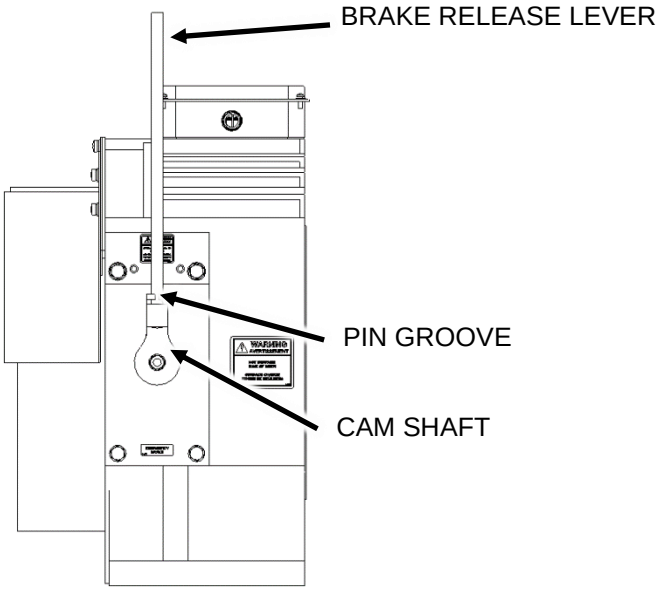

Figure 12

1. Insert the brake release lever into the cam release on top of each brake. Align the pin on the brake release lever with the mating groove on the cam release to prevent the brake release lever from slipping.

2. Apply force to the end of the brake release lever until the brake releases from the brake wheel.

3. The brake release levers must be removed from the cam release prior to normal elevator operation.

Section

6

6 Maintenance

WARNING

Before performing any maintenance checks on equipment, take all the necessary safety precautions to immobilize the car and counterweight to prevent any unintended movement during the maintenance period that may result in injury or death!

6.1 General

To keep equipment functioning efficiently, good maintenance practices must be established, observed, and maintained. Systematic inspections of the equipment should be scheduled, and records kept of these inspections. Monitoring these records will indicate any sign of a potential issue.

Each installation has its own special conditions, so it is not possible for HWEC to outline an overall plan for periodic maintenance. HWEC would recommend, at a minimum, yearly inspections, but installation conditions may warrant a more frequent schedule. The maintenance contractor will need to make the final determination.

6.2 Cleaning

Dirt, dust, excess lubrication, and moisture are the greatest enemies of electrical equipment and of maintenance teams in general. Dirt and dust layers on a machine can prevent heat dissipation, which can lead to overheating and eventual insulation breakdown. Many types of dust in an elevator machine room are electrically conductive and can also lead to insulation failure. Dust and dirt can draw moisture to unpainted surfaces such as brake rods causing oxidation that can cause brake faults. Excess lubrication can draw dust and dirt as well.

Dust and dirt can be removed from surfaces with a dry, lint-free cloth, or with suction. With suction, however, care must be taken to not build up or discharge static electricity while cleaning. Dry, compressed air (at less than 50psi) may also be used to remove dirt and dust, however, this must be closely monitored as the compressed air will re-suspend the dust and dirt in the machine room atmosphere.

6.3 Bearings

Bearings have been sized for the maximum speeds, loads and capacities found in this manual at 50% duty. The GLT-25S2 machine uses sealed bearings, no need to maintain, no need to add grease. When it is damaged, replace it with the same type.

Bearings L_{10} calculated life rating (based on speed, loads and 50% duty) is approximately 20 years. Please note that installation conditions vary, so shorter or longer bearing life may be experienced.

6.4 Brake Wear

WARNING

If the brake pad wears too much, the brake will be disabled.

6.4.1 Suggested check cycle

- Every 3 months after install in the first 6 months.
- Every 1 year afterwards.

6.4.2 Benchmark Criteria

- Check the brake for flexibility, the brake pad and traction sheave for wear, and the bearings. Replace worn and damaged parts when necessary.
- As the brake pad wears it adds to the air gap and could contribute to braking noise. You may adjust the air gap as detailed in Section 5.3.
- If brake pad wear is excessive replace the brake pad or replace the entire brake assembly. See Figure 13.

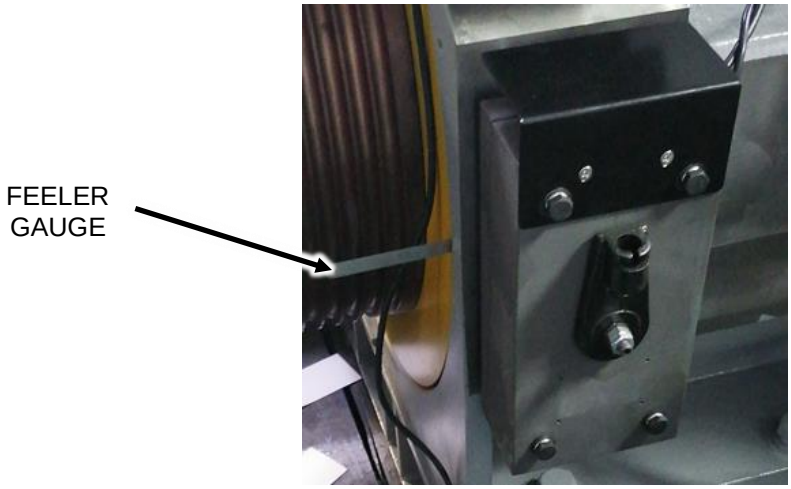

Figure 13

6.5 Other Items

The traction wheel, brake shoe, and brake wheel are usually the only components that will wear. Among them, the brake wheel is most unlikely to wear. Brake pads are more likely to wear but can be monitored with feeler gauges. Refer to the brake section of this manual for brake inspection procedures.

The winding working temperature of traction machine shall not exceed 130 ℃. It can be controlled by the thermal switch in the main machine. When the temperature reaches 130 ℃, the traction machine shall be stopped.

When the traction machine rotates under the passive condition, it will be in the state of power generation. At this time, high voltage will be generated at the host terminal. Attention shall be paid to avoid electric shock and equipment damage.

Grease and other impurities shall be avoided between the brake pad and the brake wheel to avoid the decrease of braking force of the brake system. If the residual thickness of the brake pad is less than 5 mm due to wear, the brake pad shall be replaced.

Traction wheels are the most likely item on the machines to wear. Periodic measurements of rope depth and the evenness of wear for all ropes (groove depth should wear evenly) should be monitored. Cable should not be more than 0.125 inch (1/8”) below the outer rim of the traction wheel. If cable(s), are below 0.125 inch, or if wear is uneven, replace the traction wheel and cables.

Check machine guarding and rope retainers for clearance and attachment hardware for tightness. Adjust as necessary.

Section

7

7 Replacement

WARNING

Have only qualified personnel perform the replacement work. The person who performs the replacement work must make sure that the machine power is off and that the elevator will not move unexpectedly.

7.1 Encoder Replacement

Required Tools & Materials:

- Encoder (Heidenhain ECN1313 2048)
- Hex wrench
  - 2 mm
  - 4 mm
  - 6 mm
  - 8 mm
- Hex sockets
  - 2 mm
  - 4 mm
- Torque Wrench (Need to measure 9 in-lbs. and 44 in-lbs.)
- M10 bolt (at least 1” or 25 mm in length)

7.1.1 Encoder Removal

The encoder can be removed from the back of the machine. See Figure 14.

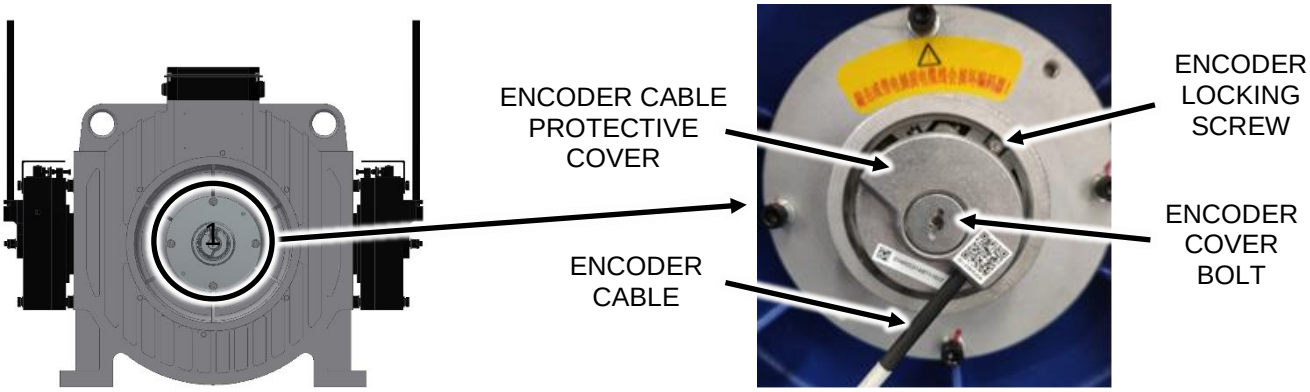

Figure 14

1. Remove the encoder cover bolt and the encoder cable protective cover using the hex wrench (4 mm). See Figure 15.

Figure 15

2. Carefully remove encoder cable, See Figure 16. **Note: Do not apply excessive pressure on the cable. It may destroy the encoder cable**

Figure 16

3. Find the encoder locking screw and loosen the encoder locking screw M2.5. The screw does not need to be removed. See Figure 17.

Figure 17

4. Loosen the bolt M5 inside by hex wrench (4 mm) 2~3 turns only. Do not remove this bolt yet **(M5 bolt must remain in the encoder so the M10 bolt can push against it)**. See Figure 18.

Figure 18

5. Insert an M10 bolt into the encoder housing. See Figure 19.

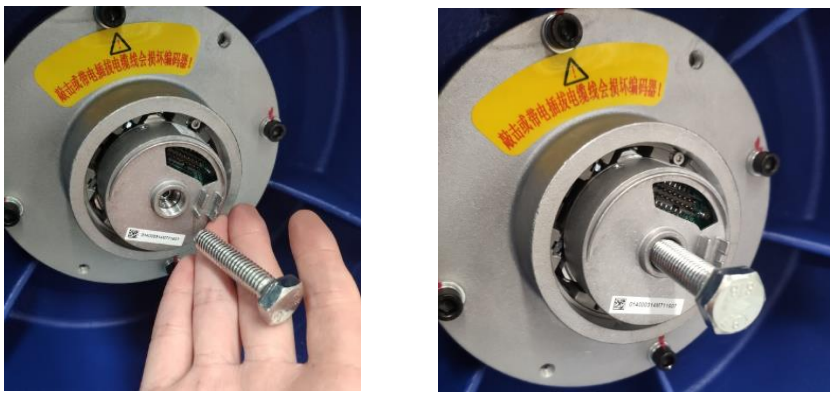

Figure 19

6. Turn the M10 bolt against the M5x50 bolt to push the encoder from the shaft. The encoder will “pop” free and will be loose to the touch yet still retained by the M5 bolt. See Figure 20.

Figure 20

7. Remove both bolts and the encoder, Figure 21.

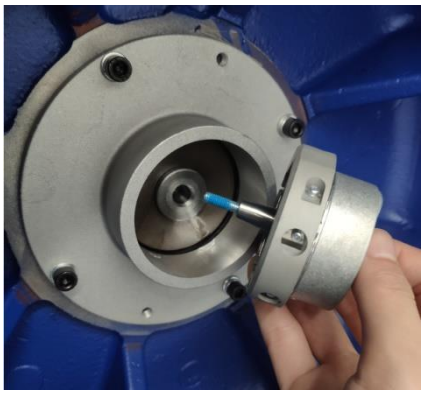

Figure 21

7.1.2 Encoder Installation

What’s in the box, see Figure 22.

Figure 22

1. Loosen and remove the bolt M2.5 and nut assembly in the new encoder. See Figure 23.

Figure 23

2. There is a taper in the front of the encoder shaft, put the encoder shaft into the hole of the shaft. Figure 24.

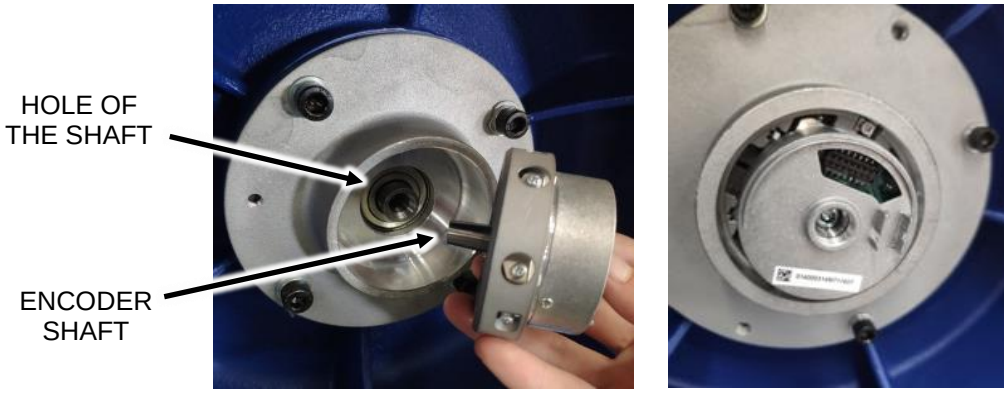

Figure 24

3. Install the encoder. Use the bolt M5 to secure the encoder to the encoder cover by hex wrench (4mm). Use 4mm socket Allen and torque wrench to tighten the bolt to 44 in-lbs. See Figure 25.

Figure 25

4. Rotate the encoder, it should be very flexible at this time, tighten the encoder locking screw according to 11 in-lbs. by a hex wrench so the encoder outer cannot rotate by hand. See Figure 26.

Figure 26

5. Install the encoder cable on the encoder. Take care to orient the plug and socket correctly. See Figure 27.

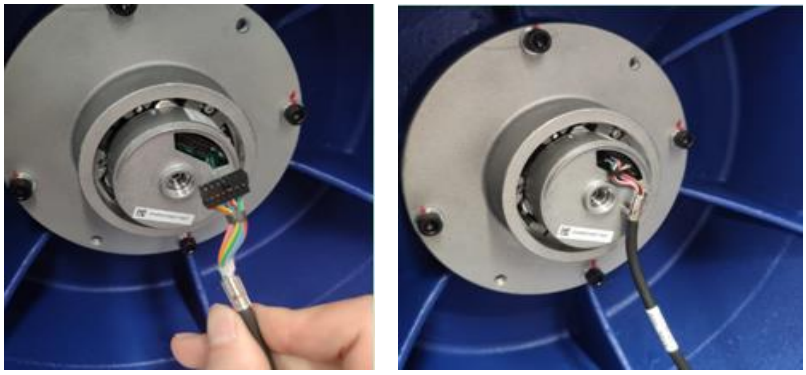

Figure 27

6. Place the cable cover on the encoder and secure with the encoder cover bolt (and cover) to the encoder. See Figure 28.

Figure 28

7. Reconnect the power supply of machine and test it.
8. Align the encoder per controller instructions.

7.2 Brake Replacement

Required Tools & Materials:

- Adjustable wrench
- Hex wrench (4 mm, 5 mm)
- Small flat head screwdriver

WARNING

Before performing any maintenance on the machine brake(s), land the counterweight and take all the necessary safety precautions to immobilize the car and counterweight to prevent any unintended movement during the maintenance period that may result in injury or death!

Read the entire brake replacement procedure before beginning any of the steps outlined below. Contact HWEC with any questions prior to beginning the brake repair or replacement.

Before opening any electrical enclosures on the machine, remove all electricity from the machine and brakes to prevent electrical shock that may result in injury or death during the maintenance period!

7.2.1 Brake Removal

1. Remove covers as necessary to access terminal blocks and brake pin set screw (4 mm hex key).
2. Disconnect machine power, see Figure 29.

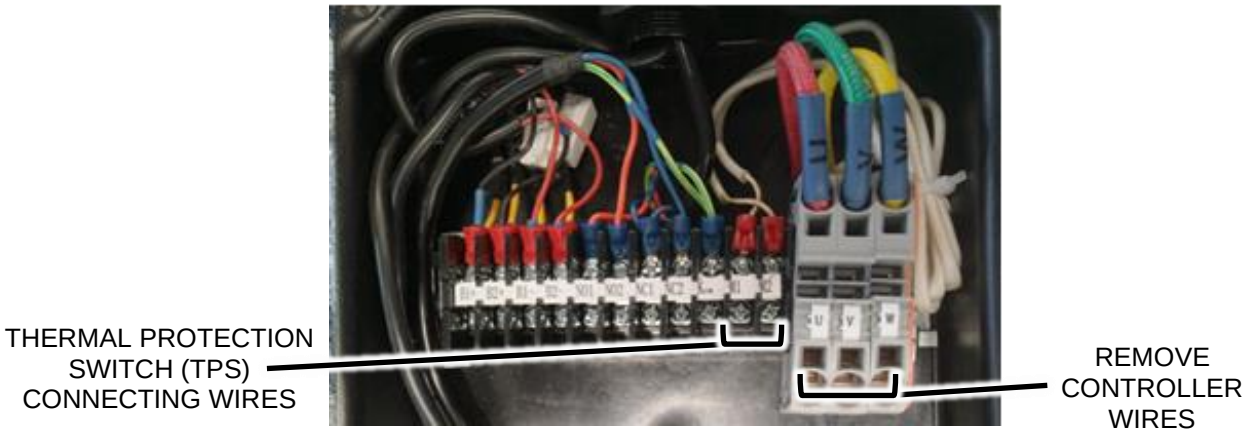

Figure 29

3. On the machine side disconnect the Brake and Brake Switch wires for the brake that is to be worked on (Figure 30).

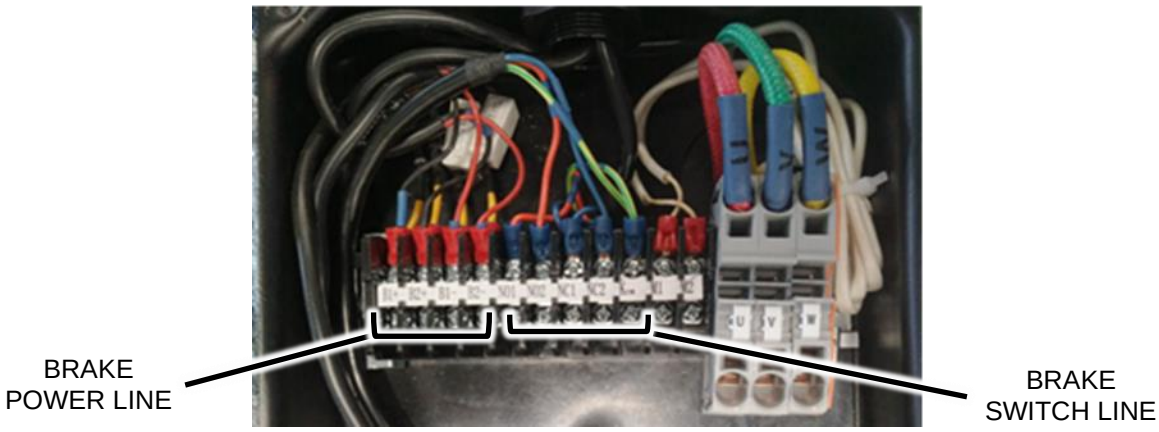

Figure 30

4. Use a wrench to loosen the mounting bolt of the installation bolt 1, so that the end face of the guide screw sleeve of the guide screw 2 is separated from the mounting surface of the base.
5. Remove the brake and related connecting accessories
6. New or repaired brakes are replaced in the reverse order of the above instructions.
7. Adjust the guide screw sleeve of guide screw 2 and the mounting bolt of insulation bolt 1, so that the air gap between the armature of armature 5 and the armature of armature iron 4 is between 0.012” (0.30 mm) to 0.022” (0.55 mm), the gap between the brake belt and the brake wheel is 0.004” (0.10 mm) to 0.006” (0.15 mm), and the distance between the guide screw sleeve of guide screw 2 and the iron surface of armature iron 4 is about 0.197” (5 mm). no less than 0.118” (3 mm) under any conditions, as shown in Figure 31

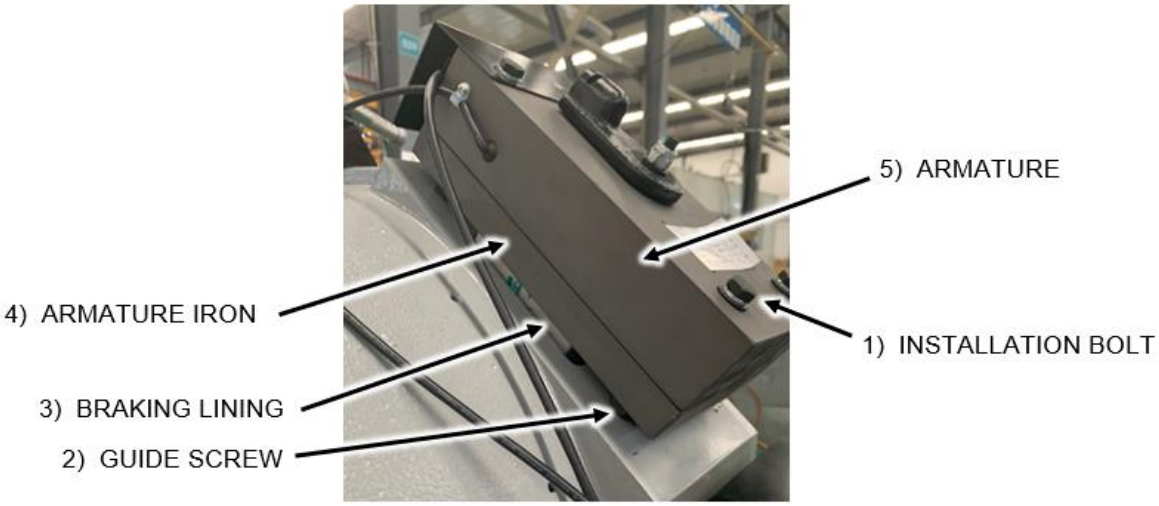

Figure 31

7.2.2 Brake Installation

After installation of the brake, please refer to Section 5.3 to confirm brake is centered and air gap has been restored to factory specifications.

WARNING

Brakes must be burnished to achieve full stopping torque!

Section

8

8 Drawings and Support Documents

8.1 Outline and Item Drawing

See replaceable parts list and outline drawing next page.

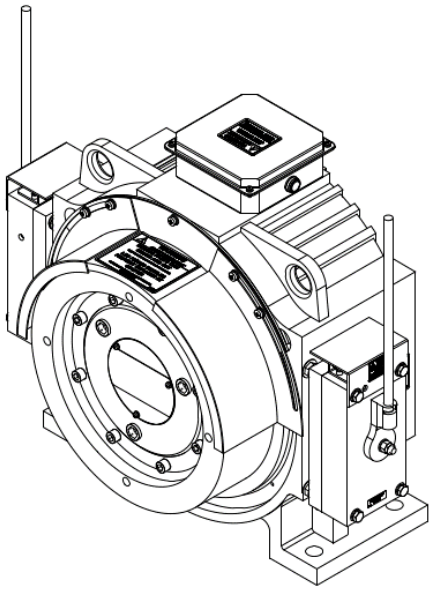

REPLACEMENT PARTS LIST

ITEM	QTY	PART NUMBER	DESCRIPTION
1	1	GLT-25S2-R	GLT GEARLESS MACHINE - AS PURCHASED
1.1	1	GL185-090	BEARING, SEALED SPHERICAL ROLLER
1.2	1	GLT-25S2-011R	15.75" TRACTION SHEAVE - AS PURCHASED
1.3	2	GLT-25S2-073	SLEAVE, CONICAL EXPANSION
1.4	1	GLT-25S2-091	BEARING, DEEP GROOVE BALL
1.5	2	GLT-25S2-150	BRAKE, GLT
1.6	2	GLT-25S2-152	BRAKE DIODE
1.7	1	GLT-25S2-176	TRACTION SHEAVE GUARD
1.8	1	ENC-1313	HEIDENHAIN ENCODER ID # 768295-03 "ECN1313 2048 62S12-78"
1.9	1	P-176	TAG, GEARLESS EMERGENCY BRAKE
1.10	1	P-184	WARNING LABEL, MOVING PARTS CAN CRUSH AND CUT
1.11	1	P-221	WARNING LABEL, LIVE CIRCUITS
1.12	1	P-222	WARNING LABEL, HOT SURFACE
1.13	2	P-239	LABEL - BRAKE ADJUSTMENT WARNING
2	1	GL080-001-04-020	ENCODER CABLE WITH PLUGS - 1.5 METER LENGTH
3	1	P-230	NAMEPLATE, SMALL, HOLLISTER-WHITNEY
4	1	P-238	TAG, DATA, MACHINE, CONTRACT

WEIGHT: 841.7 lbmass

NOTES UNLESS OTHERWISE SPECIFIED:

1. RATINGS:
   - USAGE: SINGLE WRAP, 2:1
   - WHEEL DIAMETER: 15.75in
   - VOLTAGE: 380V
   - SPEED: UP TO 500 fpm
   - CAPACITY: UP TO 2500#
   - SHAFT LOAD: 9,000#
2. SEE SHEET 3 FOR ADDITIONAL RATINGS CHART.

B	UPDATED BOM & DUTY TABLES, PUR #1491	DRO 05/21/21
A	PRODUCTION RELEASE, PUR #1395	DRO 01/13/21

THIS DRAWING IS SUPPLIED AS A REPRESENTATION OF THE EQUIPMENT HOLLISTER-WHITNEY ELEVATOR CO. LLC ("MANUFACTURER") HAS AGREED TO SUPPLY. SLIGHT ADJUSTMENTS MAY OCCUR DURING MANUFACTURING AND INSTALLATION. ANY MODIFICATIONS NOT APPROVED IN WRITING BY MANUFACTURER MAY AFFECT OPERATION, VOIDS ANY WARRANTY AND RELEASES MANUFACTURER OF ALL LIABILITY.
THIS DOCUMENT CONTAINS CONFIDENTIAL AND PROPRIETARY INFORMATION THAT CANNOT BE REPRODUCED OR DIVULGED, IN WHOLE OR IN PART, WITHOUT WRITTEN AUTHORIZATION FROM THE MANUFACTURER.

THIRD ANGLE PROJECTION

HOLLISTER-WHITNEY
ELEVATOR CO. LLC

TITLE: GLT-25S2 GEARLESS MACHINE

DRAWN BY	SCALE	MATERIAL	REFERENCE TOL.
DRO	1:6	GLT-25S2-R	ALL DIMENSIONS REFERENCE UNLESS OTHERWISE SPECIFIED

SHEET SIZE	DATE	
B	10/2/2020	GLT-25S2 SHEET 1 OF 3

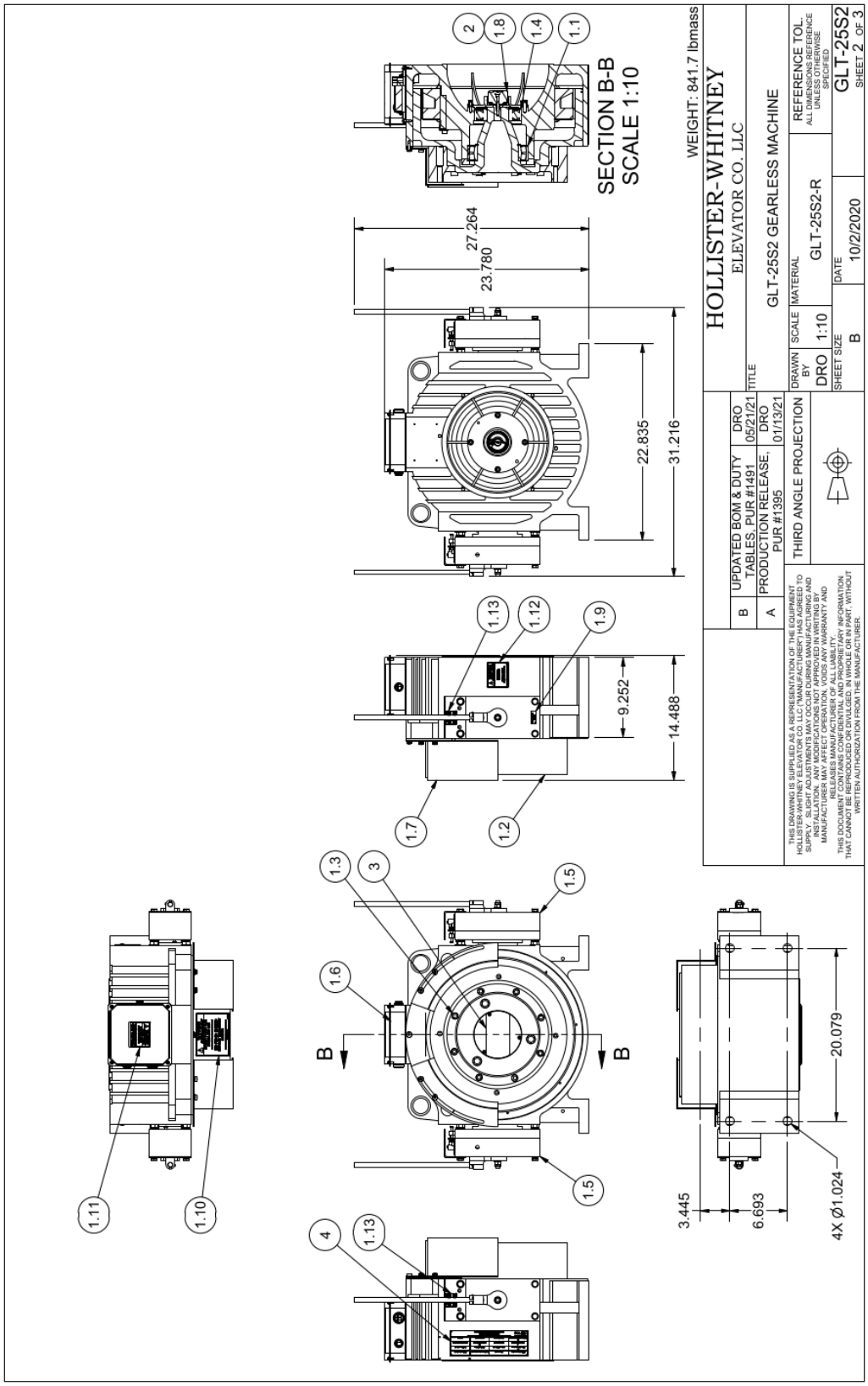
SECTION B-B
SCALE 1:10
WEIGHT: 841.7 lbmass
HOLLISTER-WHITNEY
ELEVATOR CO. LLC
GLT-25S2 GEARLESS MACHINE
TITLE
REFERENCE TOL.
ALL DIMENSIONS REFERENCE UNLESS OTHERWISE SPECIFIED
MATERIAL
GLT-25S2-R
SCALE
1:10
DRAWN BY
DRO
DATE
10/2/2020
SHEET SIZE
B
GLT-25S2
SHEET 2 OF 3
B
UPDATED BOM & DUTY TABLES, PUR #1491
DRO
05/21/21
A
PRODUCTION RELEASE, PUR #1395
DRO
01/13/21
THIRD ANGLE PROJECTION
THIS DRAWING IS SUPPLIED AS A REPRESENTATION OF THE EQUIPMENT HOLLISTER-WHITNEY ELEVATOR CO. LLC MANUFACTURER HAS AGREED TO SUPPLY. BUILDING ALTERATIONS MADE DURING MANUFACTURING AND INSTALLATION, ANY MODIFICATIONS NOT APPROVED IN WRITING BY MANUFACTURER MAY AFFECT OPERATION, VOIDS ANY WARRANTY AND RELEASES MANUFACTURER OF ALL LIABILITY.
THIS DOCUMENT CONTAINS CONFIDENTIAL AND PROPRIETARY INFORMATION, THAT CANNOT BE REPRODUCED OR DIVULGED, IN WHOLE OR IN PART, WITHOUT WRITTEN AUTHORIZATION FROM THE MANUFACTURER.
27.264
23.780
22.835
31.216
9.252
14.488
20.079
3.445
6.693
4X Ø1.024
1.1
1.2
1.3
1.4
1.5
1.6
1.7
1.8
1.9
1.10
1.11
1.12
1.13
2
3
4

380V, 2:1, 15.75" SHEAVE, SINGLE WRAP

HOLLISTER-WHITNEY PART #	HOLLISTER-WHITNEY ORDER #	SPEED (fpm)	CAPACITY (lbs)	MOTOR RATING (HP)	MOTOR RATING (kW)	POLES	RATED (rpm)	RATED VOLTAGE	ACTUAL VOLTAGE	RATED FREQ (Hz)	RATED CURRENT (A)	PEAK CURRENT (A)	RATED TORQUE (ft-lbs)	MAX ACCEL TORQUE (ft-lbs)	CWT (%)
GLT-25S2-A-T401	GLT-25S2-C-T401	100 150 200	1760	3.7 5.6 7.5	2.8 4.2 5.6	30	48.5 72.7 96.9	380	159 238 317	12.2 18.3 24.3	11.8	28.3	406	812	50
GLT-25S2-A-T402	GLT-25S2-C-T401	250 300 350	1760	9.4 11.2 13.1	7.0 8.4 9.8	30	121.2 145.4 169.7	380	220 264 308	30.0 36.0 42.5	20.1	48.2	406	812	50
GLT-25S2-A-T403	GLT-25S2-C-T401	400 450 500	1760	15.0 16.9 18.7	11.2 12.6 14.0	30	193.9 218.1 242.4	380	234 263 292	48.6 54.7 60.7	30.2	72.5	406	812	50
GLT-25S2-B-T401	GLT-25S2-C-T402	100 150 200	2200	4.5 6.8 9.1	3.4 5.1 6.8	30	48.5 72.7 96.9	380	163 244 325	12.2 18.3 24.3	14.3	34.3	491	982	50
GLT-25S2-B-T402	GLT-25S2-C-T402	250 300 350	2200	11.3 13.6 15.9	8.4 10.1 11.8	30	121.2 145.4 169.7	380	224 269 314	30.0 36.0 42.5	24.2	58.1	491	982	50
GLT-25S2-B-T403	GLT-25S2-C-T402	400 450 500	2200	18.1 20.4 22.7	13.5 15.2 16.9	30	193.9 218.1 242.4	380	237 266 296	48.6 54.7 60.7	36.5	87.6	491	982	50
GLT-25S2-C-T401	GLT-25S2-C-T403	100 150 200	2500	5.2 7.8 10.4	3.9 5.8 7.8	30	48.5 72.7 96.9	380	170 255 340	12.2 18.3 24.3	16.4	39.4	565	1130	50
GLT-25S2-C-T402	GLT-25S2-C-T403	250 300 350	2500	13.0 15.6 18.3	9.7 11.7 13.6	30	121.2 145.4 169.7	380	228 273 319	30.0 36.0 42.5	27.9	67.0	565	1130	50
GLT-25S2-C-T403	GLT-25S2-C-T403	400 450 500	2500	20.9 23.5 26.1	15.6 17.5 19.4	30	193.9 218.1 242.4	380	242 273 303	48.6 54.7 60.7	42.0	100.8	565	1130	50

WEIGHT:

NOTES UNLESS OTHERWISE SPECIFIED:

1. BRAKE INFORMATION:
   PICK VOLTAGE: 110
   PICK AMPS: 1.57
   HOLD VOLTAGE: 70
   HOLD AMPS: 1
2. BRAKE SWITCH NORMALLY CLOSED WHEN BRAKE IS DE-ENERGIZED

B	UPDATED BOM & DUTY TABLES, PUR #1491	DRO 05/21/21
A	PRODUCTION RELEASE, PUR #1395	DRO 01/13/21

THIS DRAWING IS SUPPLIED AS A REPRESENTATION OF THE EQUIPMENT HOLLISTER-WHITNEY ELEVATOR CO. LLC ("MANUFACTURER") HAS AGREED TO SUPPLY. SLIGHT ADJUSTMENTS MAY OCCUR DURING MANUFACTURING AND INSTALLATION. ANY MODIFICATIONS NOT APPROVED IN WRITING BY MANUFACTURER MAY AFFECT OPERATION, VOIDS ANY WARRANTY AND RELEASES MANUFACTURER OF ALL LIABILITY.
THIS DOCUMENT CONTAINS CONFIDENTIAL AND PROPRIETARY INFORMATION THAT CANNOT BE REPRODUCED OR DIVULGED, IN WHOLE OR IN PART, WITHOUT WRITTEN AUTHORIZATION FROM THE MANUFACTURER.

THIRD ANGLE PROJECTION

HOLLISTER-WHITNEY
ELEVATOR CO. LLC

TITLE: GLT-25S2 GEARLESS MACHINE

DRAWN BY	SCALE	MATERIAL	REFERENCE TOL.
DRO		GLT-25S2-R	ALL DIMENSIONS REFERENCE UNLESS OTHERWISE SPECIFIED

SHEET SIZE	DATE	
B	10/2/2020	GLT-25S2 SHEET 3 OF 3

Section

9

9 Notes

HEIDENHAIN

Product Information

ECN 1313
ECN 1325
ERN 1387

Rotary Encoders with Plane-Surface Coupling for Elevator Servo Drive Control

July 2017

ECN/ERN 1300 series

Rotary encoders with integral bearings for elevator technology
- **Simple installation**
- **Rigid shaft coupling**
- **Plane-surface coupling for large mounting tolerances**
- **Uniform dimensions for various electrical interfaces**

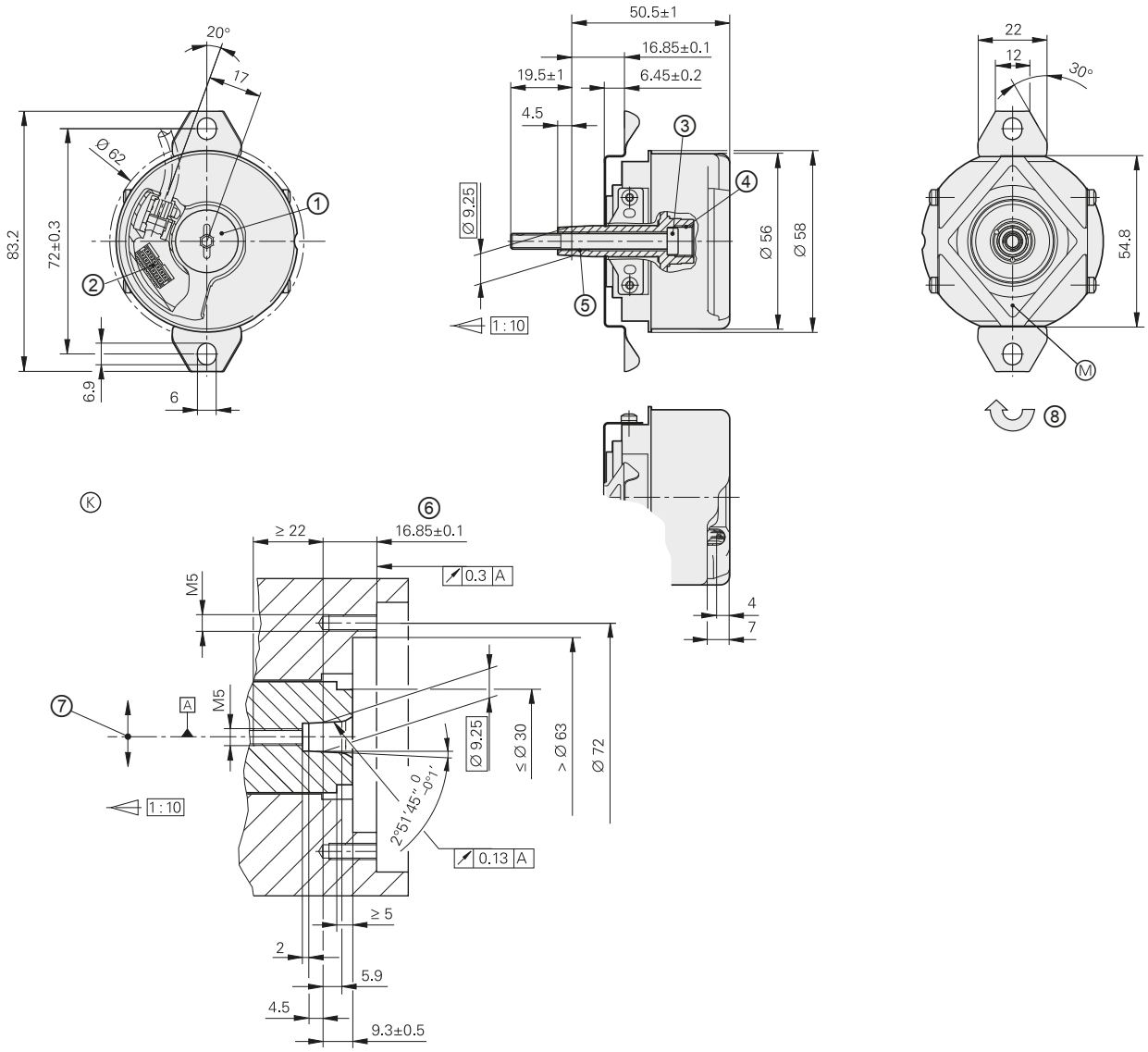

mm
Tolerancing ISO 8015
ISO 2768 - m H
< 6 mm: ±0.2 mm

A = Bearing of mating shaft
B = Bearing of encoder
K = Required mating dimensions
M = Measuring point for operating temperature
1 = Screw plug, width A/F 3 and 4. Tightening torque: 5+0.5 Nm
2 = PCB connector
3 = Self-tightening screw M5 x 50 DIN 6912 width A/F 4, tightening torque 5+0.5 Nm
4 = M10 back-off thread
5 = M6 back-off thread
6 = Max. permissible tolerance during motor shaft rotation ±1.5 mm
7 = Max. permissible static radial offset of motor shaft in indicated direction ±0.13 mm
8 = Direction of shaft rotation for output signals as per the interface description

	Absolute		***Incremental***
	ECN 1325	**ECN 1313**	**ERN 1387**
Part number	683643-xx	768295-xx	749146-xx
Interface[1]	EnDat 2.2		∿ 1 V_{PP}
Ordering designation	EnDat22	EnDat01	–
Position values/revolution	33 554 432 (25 bits)	8192 (13 bits)	Z1 track[3]
Electrically permissible speed/error[2]	≤ 15 000 rpm (for continuous position value)	≤ 1500 rpm/±1 LSB ≤ 12 000 rpm/±50 LSB	–
Calculation time t_{cal} Clock frequency	≤ 7 µs ≤ 16 MHz	≤ 9 µs ≤ 2 MHz	– –
Incremental signals[1]	–	∿ 1 V_{PP}	∿ 1 V_{PP}
Line count/system accuracy	2048/±20"		
Reference mark	–		One
Cutoff frequency –3 dB	–	≥ 400 kHz	≥ 210 kHz
Electrical connection Via PCB connector	*Rotary encoder:* 12-pin *Temperature sensor*[4]: 4-pin	12-pin	14-pin
Voltage supply	DC 3.6 V to 14 V		DC 5 V ±0.25 V
Power consumption[1] (maximum)	*3.6 V:* ≤ 600 mW *14 V:* ≤ 700 mW		–
Current consumption	*5 V:* 85 mA (typical, without load)		≤ 130 mA (without load)
Stator coupling	Plane-surface coupling		
Shaft	Taper shaft ∅ 9.25 mm; taper 1:10		
Mech. permiss. speed n	≤ 2000 rpm		
Starting torque	≤ 0.01 Nm (at 20 °C)		
Moment of inertia of rotor	$2.6 \cdot 10^{-6}$ kgm^2		
Permissible axial motion of measured shaft[5]	±1.5 mm		
Radial runout of the measured shaft	0.13 mm		
Vibration 55 Hz to 2000 Hz **Shock** 6 ms	≤ 300 m/s^2 [6] (EN 60 068-2-6) ≤ 2000 m/s^2 (EN 60 068-2-27)		
Operating temperature	–40 °C to +115 °C		–40 °C to +120 °C
Protection EN 60 529	IP40 when mounted		
Mass	≈ 0.25 kg		

[1] See *Interfaces of HEIDENHAIN Encoders* brochure
[2] Velocity-dependent deviations between the absolute value and incremental signals
[3] One sine and one cosine signal per revolution
[4] Evaluation optimized for KTY 84-130
[5] Compensation of mounting tolerances and thermal expansion, not dynamic motion
[6] As per standard for room temperature; for operating temperature Up to +100 °C: ≤ 300 m/s^2
Up to +115 °C or +120 °C: ≤ 150 m/s^2

Electrical connection

Pin layouts

ECN 1313 pin layout

17-pin coupling or flange socket M23

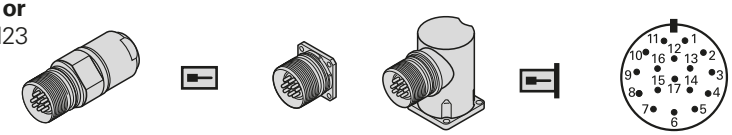

12-pin PCB connector

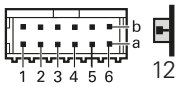

	Power supply					Incremental signals[1]				Serial data transfer			
	7	**1**	**10**	**4**	**11**	**15**	**16**	**12**	**13**	**14**	**17**	**8**	**9**
12	**1b**	**6a**	**4b**	**3a**	**/**	**2a**	**5b**	**4a**	**3b**	**6b**	**1a**	**2b**	**5a**
	U_P	**Sensor** U_P	**0 V**	**Sensor** 0 V	**Internal shield**	**A+**	**A–**	**B+**	**B–**	**DATA**	**$\overline{\text{DATA}}$**	**CLOCK**	**$\overline{\text{CLOCK}}$**
	Brown/ Green	Blue	White/ Green	White	/	Green/ Black	Yellow/ Black	Blue/ Black	Red/ Black	Gray	Pink	Violet	Yellow

	Other signals	
	5	**6**
	/	**/**
12	**/**	**/**
	Brown[2]	White[2]

Cable shield connected to housing; **U_P** = Power supply voltage; **T** = Temperature
Sensor: The sensor line is connected in the encoder with the corresponding power line.
Vacant pins or wires must not be used.

[1] Only with ordering designations EnDat 01 and EnDat 02
[2] Only for cables inside the motor housing

ECN 1325 pin layout

8-pin coupling or flange socket, M12

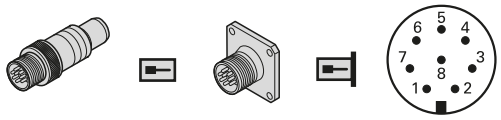

9-pin flange socket, M23

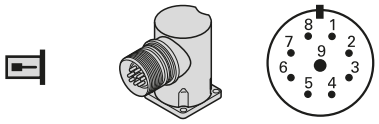

16-pin PCB connector

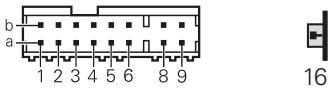

	Voltage supply				Serial data transfer				Other signals	
M12	**8**	**2**	**5**	**1**	**3**	**4**	**7**	**6**	**/**	**/**
M23	**3**	**7**	**4**	**8**	**5**	**6**	**1**	**2**	**/**	**/**
16	**1b**	**6a**	**4b**	**3a**	**6b**	**1a**	**2b**	**5a**	**8a**	**8b**
	U_P	**Sensor** U_P	**0 V**	**Sensor** 0 V	**DATA**	**$\overline{\text{DATA}}$**	**CLOCK**	**$\overline{\text{CLOCK}}$**	**T+**	**T–**
	Brown/ Green	Blue	White/ Green	White	Gray	Pink	Violet	Yellow	Brown	Green

Cable shield connected to housing
U_P = Power supply; **T** = Temperature
Sensor: The sensor line is connected in the encoder with the corresponding power line.
Vacant pins or wires must not be used.

ERN 1387 pin layout

17-pin coupling or flange socket M23

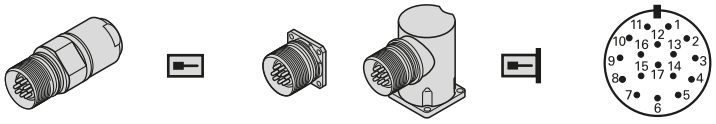

14-pin PCB connector

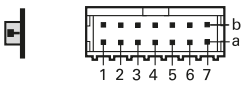

	Voltage supply					Incremental signals					
	7	**1**	**10**	**4**	**11**	**15**	**16**	**12**	**13**	**3**	**2**
	1b	**7a**	**5b**	**3a**	**/**	**6b**	**2a**	**3b**	**5a**	**4b**	**4a**
	U_P	**Sensor** U_P	**0 V**	**Sensor** 0 V	**Internal shield**	**A+**	**A–**	**B+**	**B–**	**R+**	**R–**
	Brown/ Green	Blue	White/ Green	White	/	Green/ Black	Yellow/ Black	Blue/Black	Red/Black	Red	Black

	Other signals					
	14	**17**	**9**	**8**	**5**	**6**
	7b	**1a**	**2b**	**6a**	**/**	**/**
	C+	**C–**	**D+**	**D–**	**T+**[1)]	**T–**[1)]
	Gray	Pink	Yellow	Violet	Green	Brown

Cable shield connected to housing;
U_P = Power supply; **T** = Temperature
Sensor: The sensor line is connected internally with the corresponding power line.
Vacant pins or wires must not be used.

[1)] Only for cables inside the motor housing

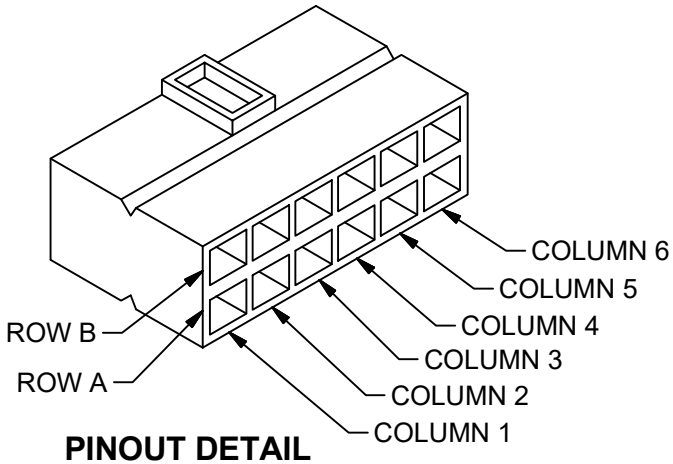

PINOUT DETAIL
SCALE 4:1

PIN LAYOUT		
PIN	WIRE COLOR	FUNCTION
1A	PINK	DATA -
2A	GREEN/BLACK	A+
3A	WHITE	SENSOR (V0)
4A	BLUE/BLACK	B+
5A	YELLOW	CLOCK -
6A	BLUE	SENSOR (Up)
1B	BROWN/GREEN	POWER (Up)
2B	PURPLE	CLOCK +
3B	RED/BLACK	B-
4B	WHITE/GREEN	ZERO V (V0)
5B	YELLOW/BLACK	A-
6B	GREY	DATA +

NOTES: HEIDENHAIN CABLE ASSEMBLY. REF. ID No. 730736-22

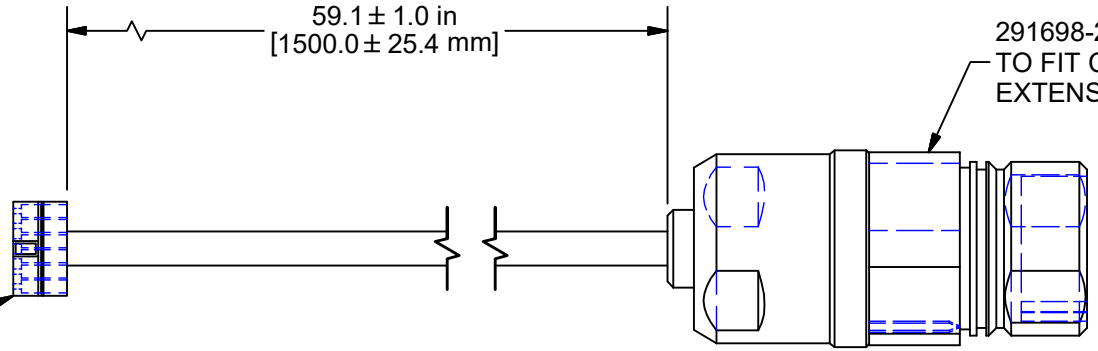

WEIGHT: 0.5 lbmass

			A	PRODUCTION RELEASE, PUR #1103	LTL 6/26/19

THIS DRAWING IS SUPPLIED AS A REPRESENTATION OF THE EQUIPMENT HOLLISTER-WHITNEY ELEVATOR CO. LLC ("MANUFACTURER") HAS AGREED TO SUPPLY. SLIGHT ADJUSTMENTS MAY OCCUR DURING MANUFACTURING AND INSTALLATION. ANY MODIFICATIONS NOT APPROVED IN WRITING BY MANUFACTURER MAY AFFECT OPERATION, VOIDS ANY WARRANTY AND RELEASES MANUFACTURER OF ALL LIABILITY.
THIS DOCUMENT CONTAINS CONFIDENTIAL AND PROPRIETARY INFORMATION THAT CANNOT BE REPRODUCED OR DIVULGED, IN WHOLE OR IN PART, WITHOUT WRITTEN AUTHORIZATION FROM THE MANUFACTURER.

THIRD ANGLE PROJECTION

HOLLISTER-WHITNEY
ELEVATOR CO. LLC

TITLE
ENCODER CABLE WITH PLUGS - 1.5 METER LENGTH

DRAWN BY	SCALE	MATERIAL	REFERENCE TOL.
LTL	1 : 1	AS PURCHASED, SEE NOTES	ALL DIMENSIONS REFERENCE UNLESS OTHERWISE SPECIFIED

SHEET SIZE	DATE	
A	4/30/2019	GL080-001-04-020 SHEET 1 OF 1

Stiftsteckverbinder : SUB–D 15 pol.
Metallgehäuse mit Schirmanbindung
Gehäusebreite max 31 mm

Kabel : 4 x (2 x 0,14) + 2 x (0,5)
Geeignet für Energieführungsketten
Dauerbetriebstemperatur 80 Grad
Ölbeständig
Farbe orange RAL 2003

Buchsensteckverbinder : Metallgehäuse mit Schirmanbindung, Kontaktbuchsen

Hersteller 1 : Intercontec
Typ : ASTA 035 FR 11 12 0005 000

Hersteller 2 : Interconnectron
Typ : SPN A 17B NN NN 169

Hersteller 3 : Coninvers
Typ : RC–17 S1N8A R300

CABLE LENGTH UP TO 30 M

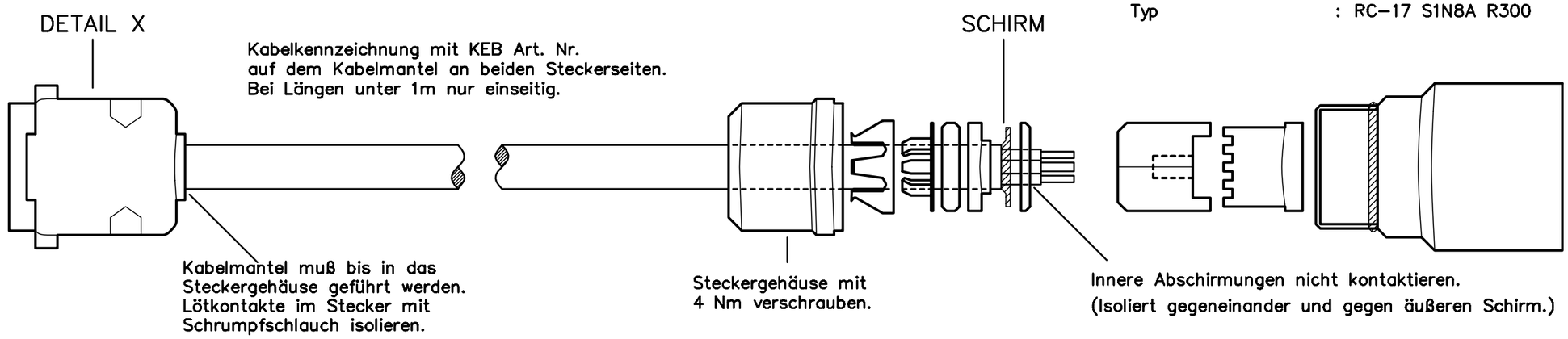

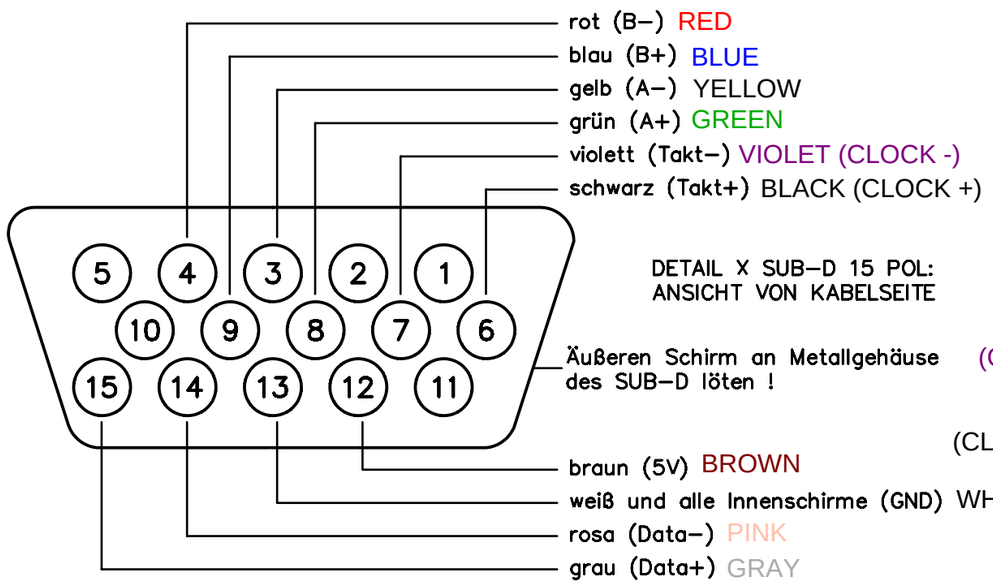

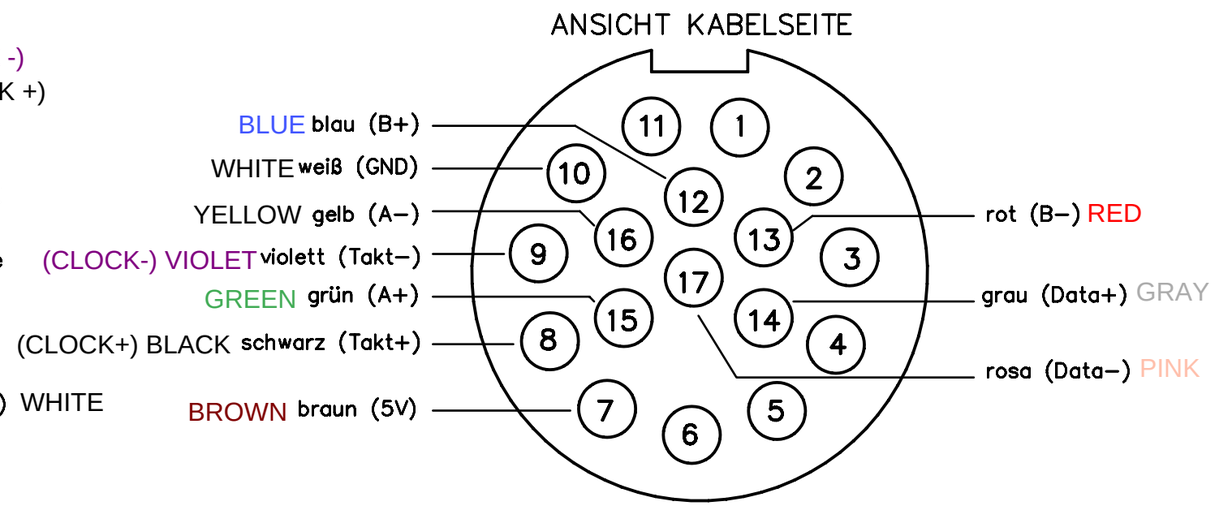

00.F5.0C1–4xPx KABELLAENGE x,x METER
00.F5.0C1–4xxx KABELLAENGE xxx METER

Änderungen : /Modifications					
	g				
	f				
	e				
	d				
	c				
	b				
	a				
Nr.:		Datum	Name	Paßmaß Size of fit	Abmaß Deviation

Rohmaß: /Rough size:	Ident–Nr.:	Menge: /Qty.:	ME	Werkstoff: /Material:	Rohteil–Nr.: /Blank–No.:

verzinkt, blau passiviert / zinc–plated, blue passivated / Schichtdicke: Thickness of coat: úm

Schutzvermerk DIN 34 beachten
Observe protection note DIN 34

Allgemeintoleranz	Tolerierung	Oberflächenangaben	Werkstückkanten
DIN 6930–m general tolerance	ISO 8015 Tolerancing	DIN ISO 1302 Surface details	DIN 6784 Workpiece edges

Keine Maße aus der Zeichnung abnehmen/Do not scale

Alle Maße in Millimeter/All dimensions in millimetres

Benennung: /Title
Geberkabel F5

Zeichnungs–Nr.: /Drawing No.:
00.F5.0C1–4005

	Datum	Name
gez.:	05.04.02	Horn
gepr.:		

Format Size | Maßstab Scale: 1:1

KEB ANTRIEBSTECHNIK
Karl E. Brinkmann GmbH
D 32677 Barntrup

Kantenbruch/Break of sharp edges

x = Rz 100
y = Rz 25
z = Rz 6,3
w = geschliffen/ground Rz 4

Ohne unsere vorherige Zustimmung darf diese Zeichnung weder vervielfältigt, noch Dritten zugänglich gemacht werden, und sie darf durch Empfänger oder Dritte auch nicht in anderer Weise mißbräuchlich verwendet werden.

Auto – CAD

This drawing may not be duplicated nor retransmitted to others without our prior permission. Any improper use is forbidden.

Stiftsteckverbinder : SUB–D 15 pol.
Metallgehäuse mit Schirmanbindung
Gehäusebreite max 31 mm

Kabel : (4 x (2x0,25) + 2 x 1,0)
Geeignet für Energieführungsketten
Helukabel Topgeber 510 77750
Aderfarbkode nicht nach DIN 47100

Buchsensteckverbinder : Metallgehäuse mit Schirmanbindung, Kontaktbuchsen

Hersteller 1 : Intercontec
Typ : ASTA 035 FR 11 12 0005 000

Hersteller 2 : Interconnectron
Typ : SPN A 17B NN NN 169

Hersteller 3 : Coninvers
Typ : RC–17 S1N8A R300

CABLE LENGTH OVER 40 METERS

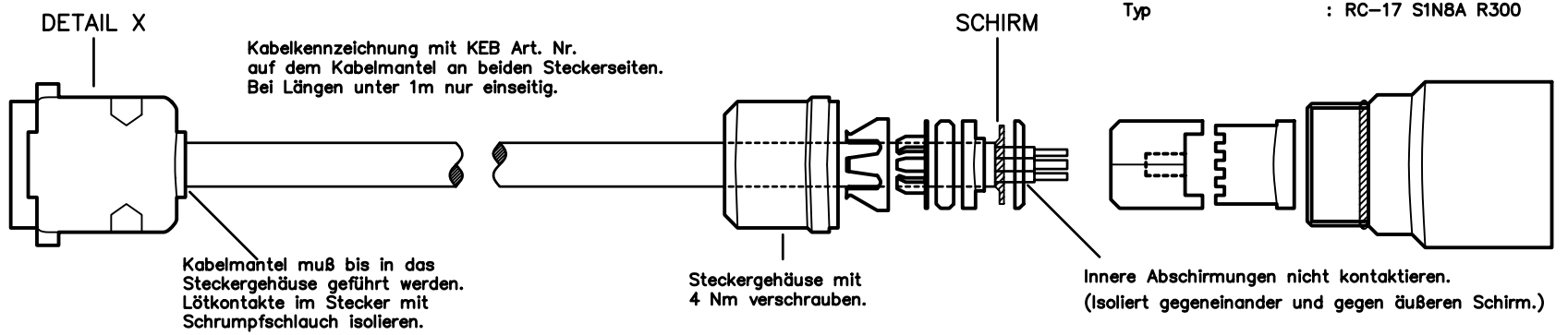

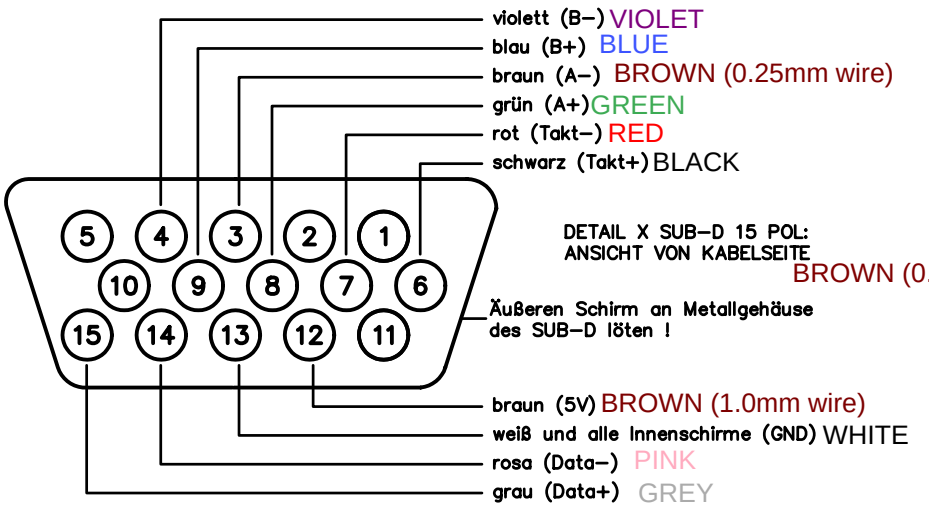

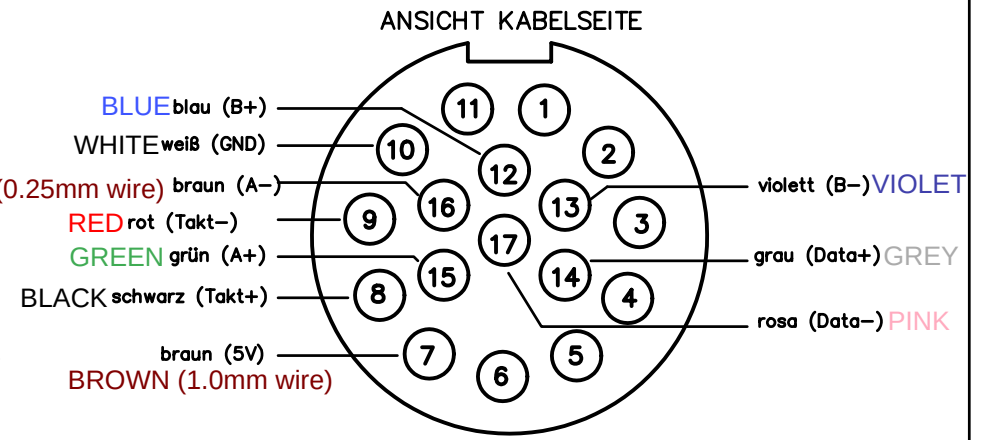

00.F5.0C1–LxPx KABELLAENGE x,x METER

00.F5.0C1–Lxxx KABELLAENGE xxx METER

Änderungen : /Modifications						
	g					
	f					
	e					
	d					
	c					
	b					
	a					
Nr.:		Datum	Name	Paßmaß Size of fit	Abmaß Deviation	

Rohmaß: /Rough size:	Ident–Nr.:	Menge: /Qty.:	ME	Werkstoff: /Material:	Rohteil–Nr.: /Blank–No.:

verzinkt, blau passiviert / zinc–plated, blue passivated / Schichtdicke: / Thickness of coat: úm

Schutzvermerk DIN 34 beachten / Observe protection note DIN 34

Allgemeintoleranz	Tolerierung	Oberflächenangaben	Werkstückkanten
DIN 6930–m general tolerance	ISO 8015 Tolerancing	DIN ISO 1302 Surface details	DIN 6784 Workpiece edges

Keine Maße aus der Zeichnung abnehmen/Do not scale

Alle MaBe in Millimeter/All dimensions in millimetres

Benennung: /Title

Geberkabel F5

Zeichnungs–Nr.: /Drawing No.:

00.F5.0C1–L005

	Datum	Name
gez.:	15.06.07	Horn
gepr.:		

Format Size | Maßstab Scale: 1:1

KEB ANTRIEBSTECHNIK Karl E. Brinkmann GmbH
D 32677 Barntrup

Kantenbruch/Break of sharp edges

x = Rz 100
y = Rz 25
z = Rz 6,3
w = geschliffen/ground Rz 4

Ohne unsere vorherige Zustimmung darf diese Zeichnung weder vervielfältigt, noch Dritten zugänglich gemacht werden, und sie darf durch Empfänger oder Dritte auch nicht in anderer Weise mißbräuchlich verwendet werden.

Auto – CAD

This drawing may not be duplicated nor retransmitted to others without our prior permission. Any improper use is forbidden.

Hollister-Whitney Elevator Corporation

#1 Hollister-Whitney Parkway
Quincy, IL 62305
Phone: 217-222-0466

Fax: 217-222-0493
e-mail: info@hollisterwhitney.com
www.hollisterwhitney.com

GERMAN	ENGLISH
ROT	RED
BLAU	BLUE
GELB	YELLOW
GRÜN	GREEN
VIOLETT	VIOLET
SCHWARZ	BLACK
BRAUN	BROWN
WEIβ	WHITE
ROSA	PINK
GRAU	GREY